US Army Corps
of Engineers

San Francisco-Oakland Bay Bridge (SFOBB)

Evaluation & Assessment of Proposed Alternatives

Retrofit or Replace the East Span

US Army Corps
of Engineers

Existing Conditions

The San Francisco Bay region sits astride a dangerous "earthquake machine"

-- USGS

US Army Corps
of Engineers

Project Introduction

US Army Corps
of Engineers

Project Introduction

Seismic concerns

- Loma Prieta was a 7.0 magnitude event, epicenter was 60 miles away
- Hayward Fault is five miles away (MCE 7 1/4)
- San Andreas Fault is less than ten miles away (MCE 8)
- 70% probability of a major earthquake (6.7 or greater) in the Bay Area sometime in the next 30 years

US Army Corps of Engineers

San Francisco Bay Area Faults

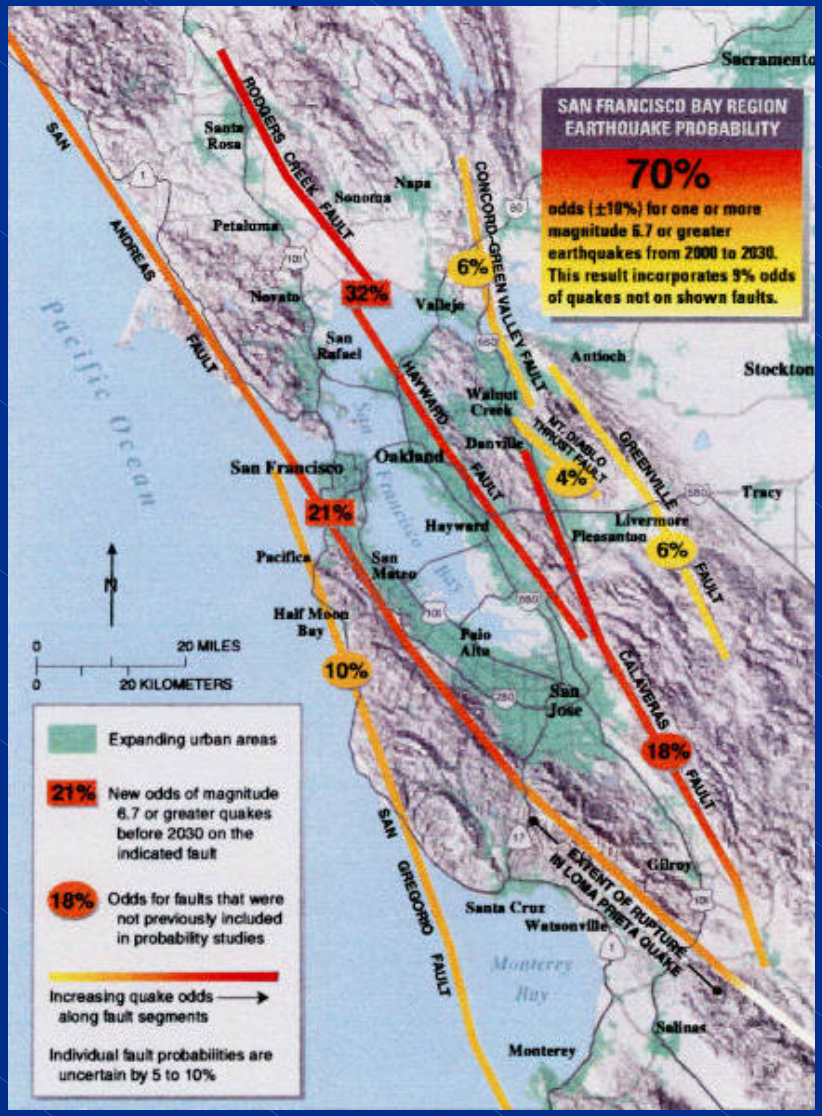

US Army Corps
of Engineers

Alternatives

Retrofit

Replacement

US Army Corps of Engineers

Question 1

?

1. Was Caltrans' selection of the proposed retrofit alternative reasonable--I.e., was it based on appropriate criteria and sound analysis, including consideration of realistic, accurate and complete cost figures?

A. Did Caltran adequately consider/evaluate other retrofit alternative, including a West Span-type retrofit and other steel retrofits, and did this evaluation include consideration of realistic, accurate and conplete cost figures?

B. Did Caltrans adequately consider/evaluate the ability of other retrofit alternatives, including a West-Span-type retrofit and other steel retrofits, to meet lifeline criteria?

C. Did Caltrans adequately consider/evaluate the costs of retrofitting the span to meet lifeline criteria?

US Army Corps of Engineers

Questions 2, 3 & 4

?

2. Was Caltrans' cost-benefit analysis comparing the originally proposed replacement alternative vs. the proposed retrofit alternative reasonable--I.e., was it based on appropriate criteria and sound analysis, including consideration of realistic, accurate and complete cost figures?

3. How does the currently proposed replacement alternative compare to various retrofit alternatives in terms of a) cost, b) seismic reliability, including the ability to meet lifeline criteria?

4. Is the currently proposed replacement alternative seismically safe? How will this replacement alternative perform in a maximum credible earthquake? Does this alternative meet lifeline criteria? To what extent and how quickly could it accommodate passenger vehicles?

US Army Corps
of Engineers

Alternatives

US Army Corps of Engineers

Existing Conditions

Roadway Section

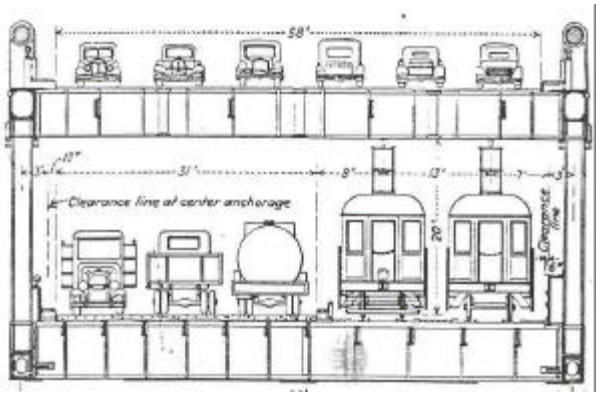

Original roadway cross section

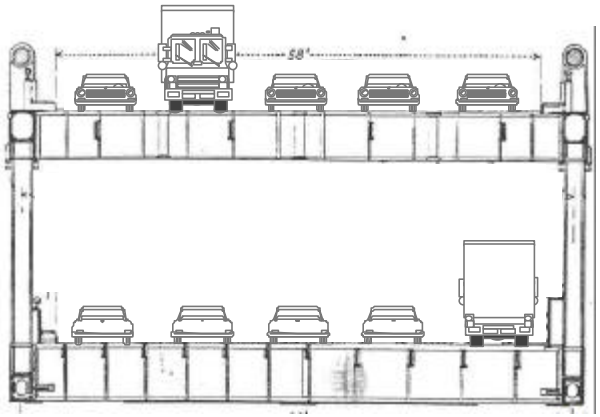

Current roadway cross section

The original roadway section, designed under criteria of the 1930s, was developed to accommodate six lanes of auto traffic on the upper deck, and three lanes of truck traffic and two tracks of rail on the lower deck.

The bridge was reconfigured in the late 1950s to provide five lanes of vehicular traffic in both the eastbound and westbound directions.

US Army Corps
of Engineers

Retrofit - Key Map

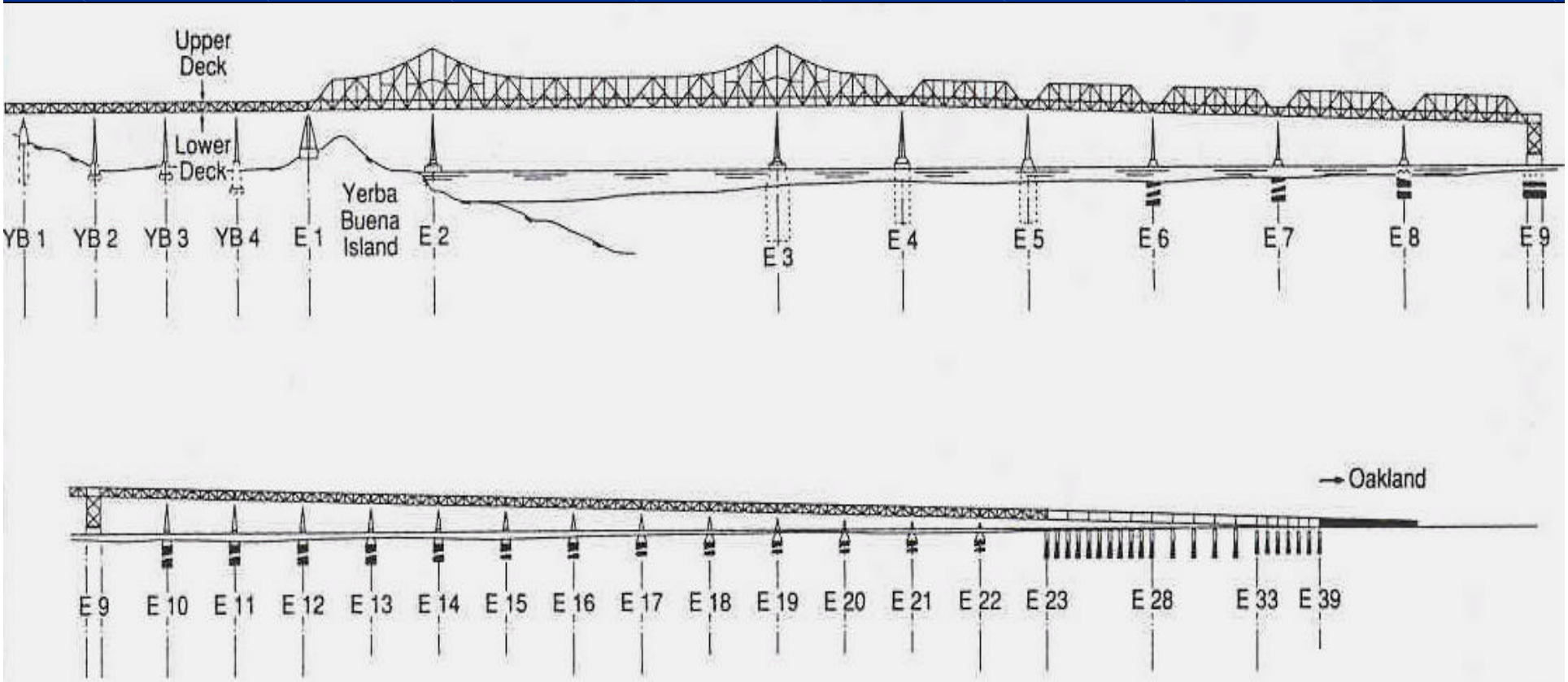

East Span pier locations by pier numbers

US Army Corps of Engineers

Existing Conditions

Geologic Conditions

Bedrock slopes steeply from the east side of Yerba Buena Island to elevation -91 meters and then slopes more gently to elevation -134 meters as it approaches the Oakland Touchdown.

The Yerba Buena Mud is thickest, approximately 36.5 meters thick, in the vicinity of the cantilever section of the bridge between the two largest piers of the east span, Piers E-2 and E-3.

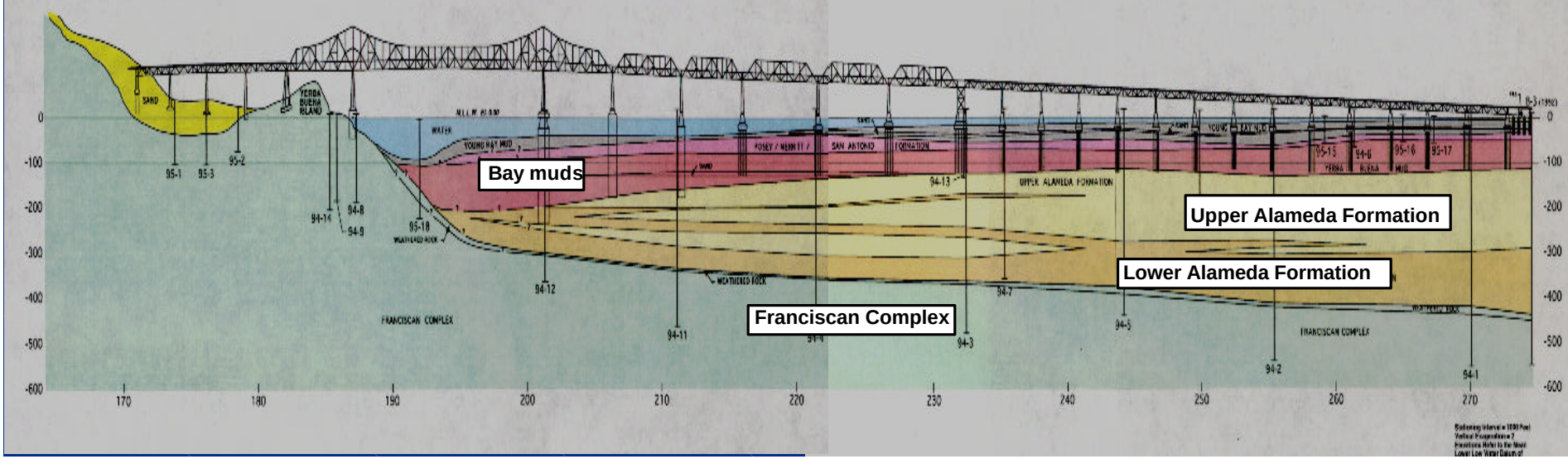

US Army Corps of Engineers

Existing Conditions

Foundations

Pier E3

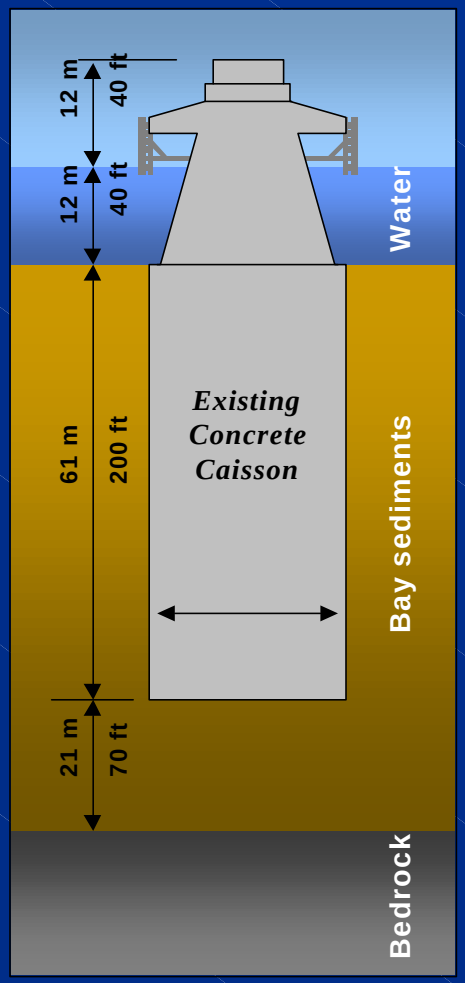

Piers E6 to E8

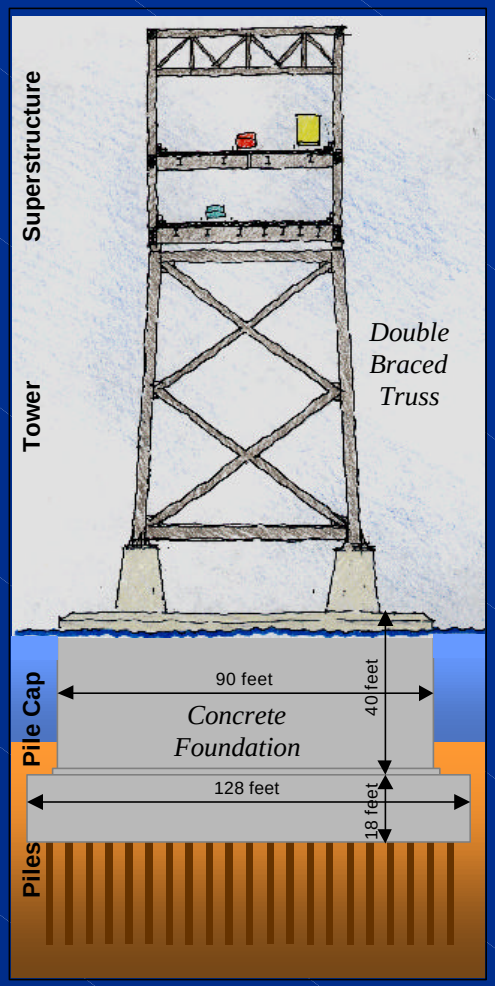

Piers E10 to E23

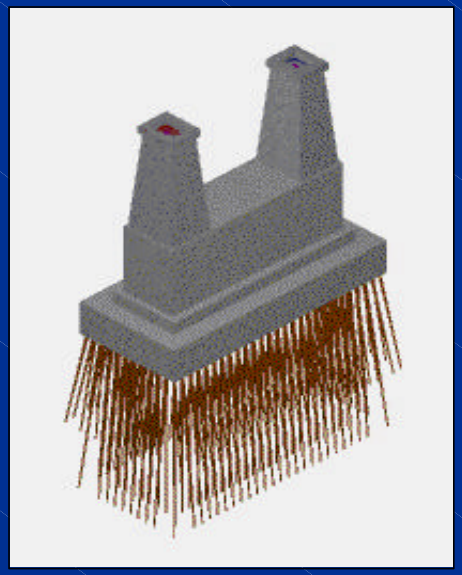

US Army Corps of Engineers

Existing Conditions

Cantilever Section

The superstructure of the cantilever section is comprised of three sections, two cantilever side spans and a center span truss.

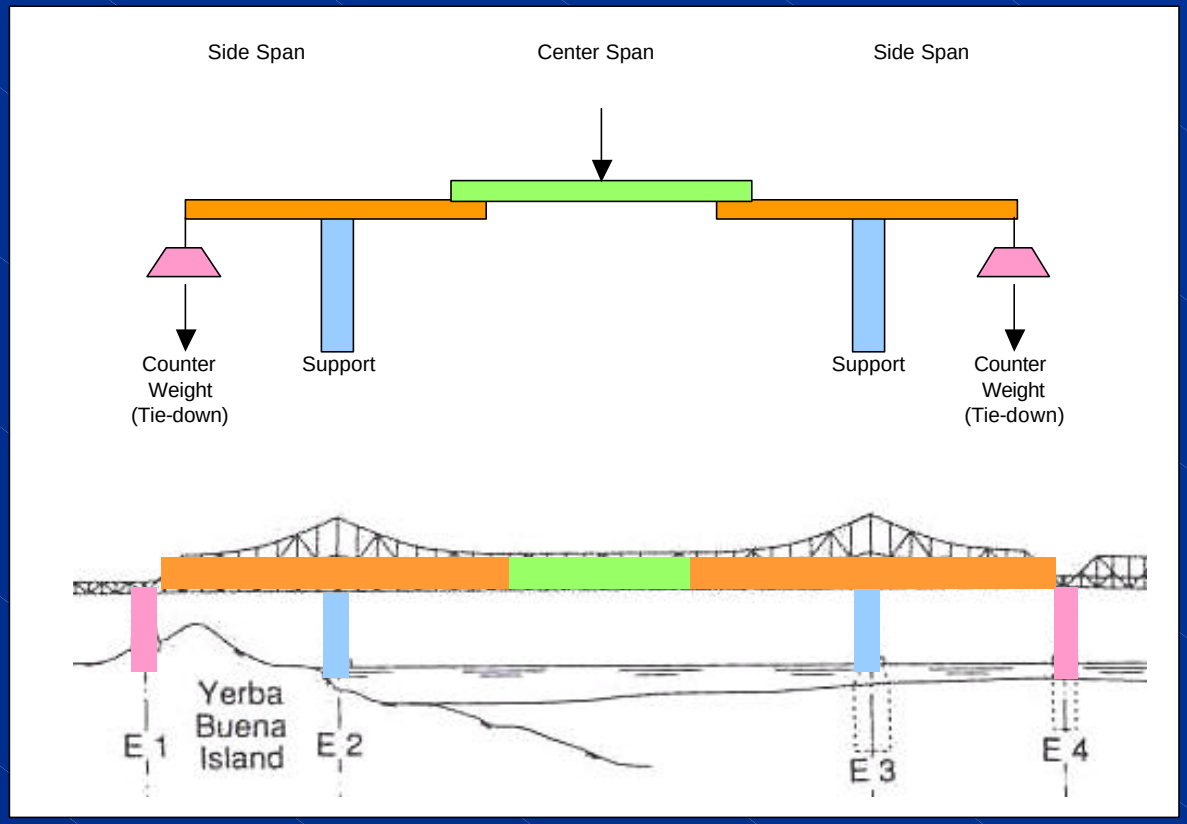

US Army Corps of Engineers

Retrofit

Foundations

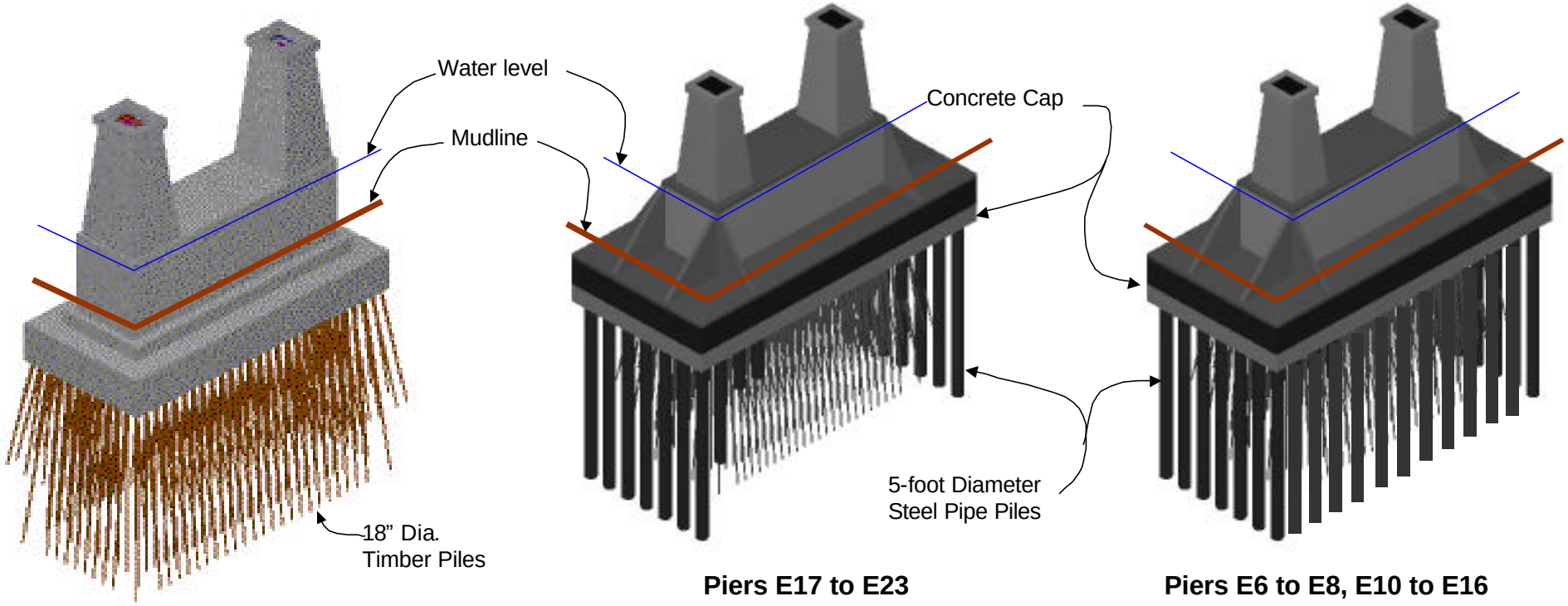

Piers E17 to E23

Piers E6 to E8, E10 to E16

Existing

Proposed Retrofit

US Army Corps of Engineers

Alternatives

Retrofit - Towers

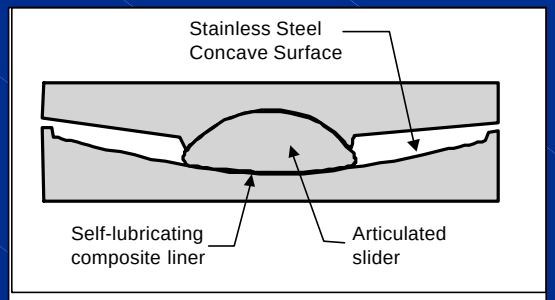

Pendulum Isolation Bearing

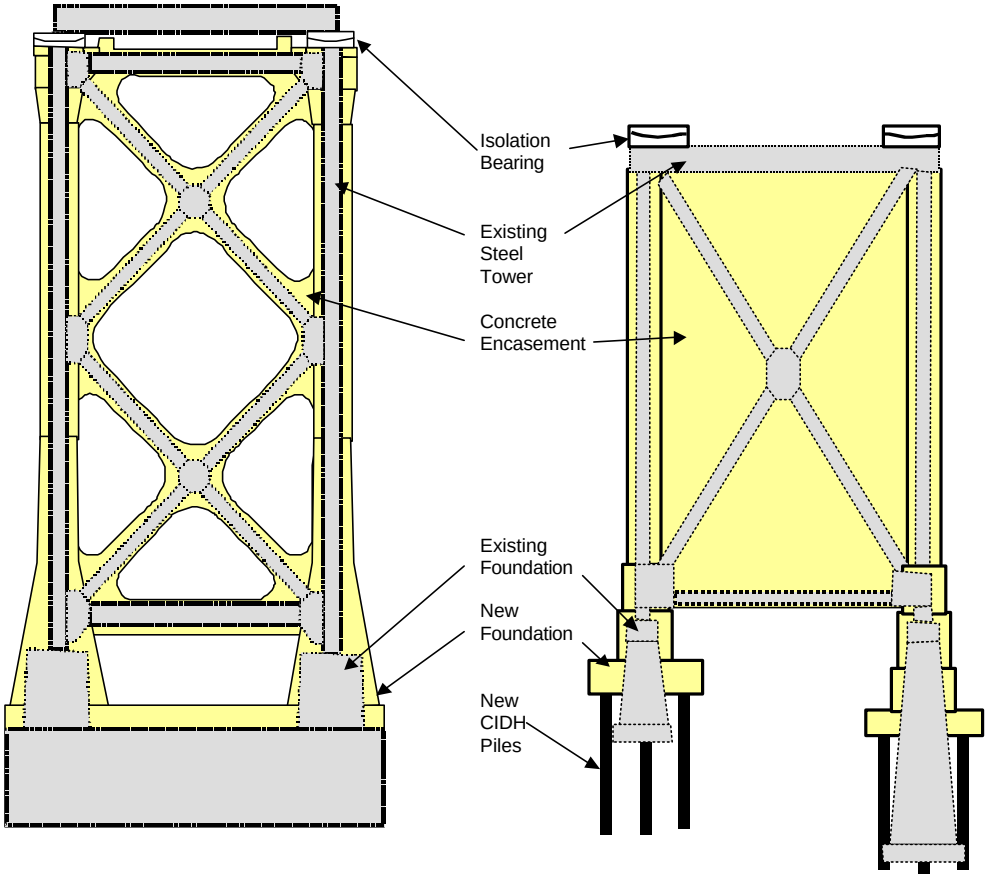

Pier E5 – Proposed retrofit for the tower (typical)

Pier YB4 – Proposed retrofit for the tower and foundation

US Army Corps of Engineers

Retrofit

Cantilever Section

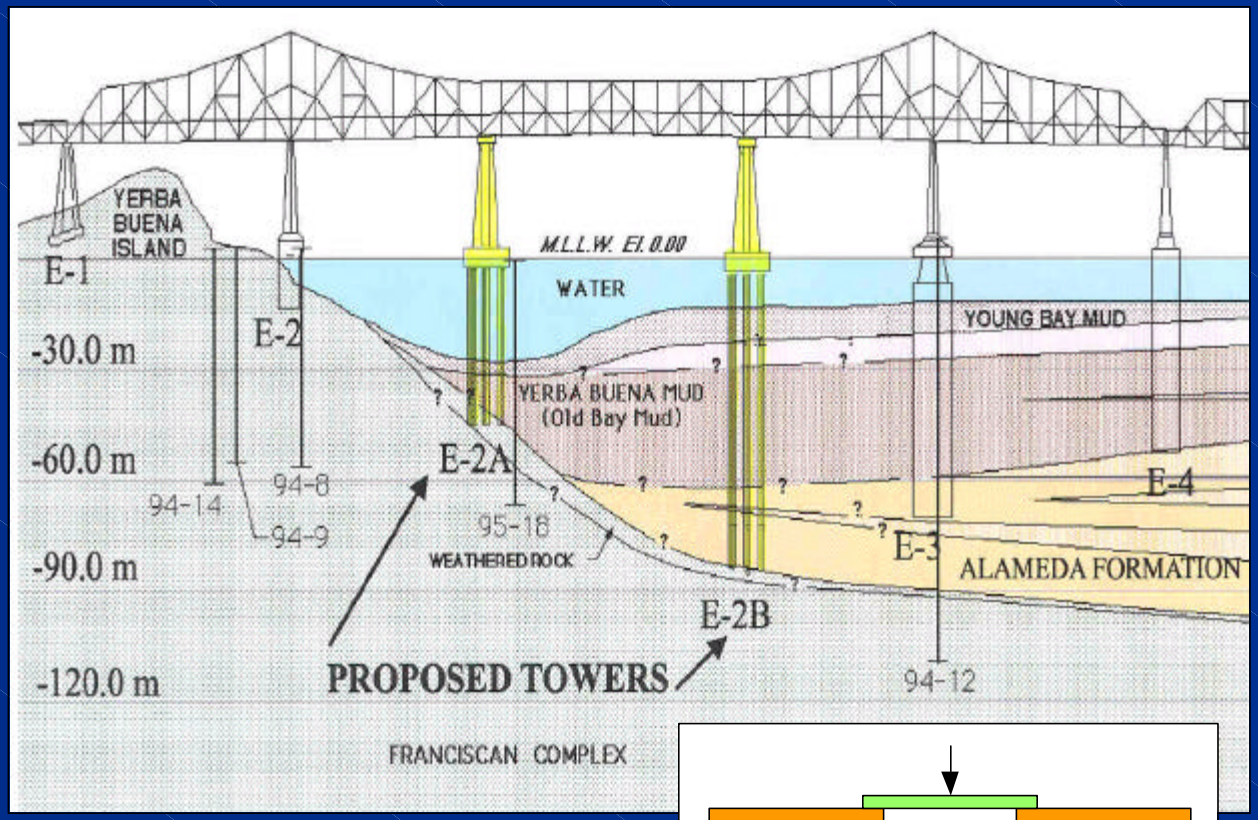

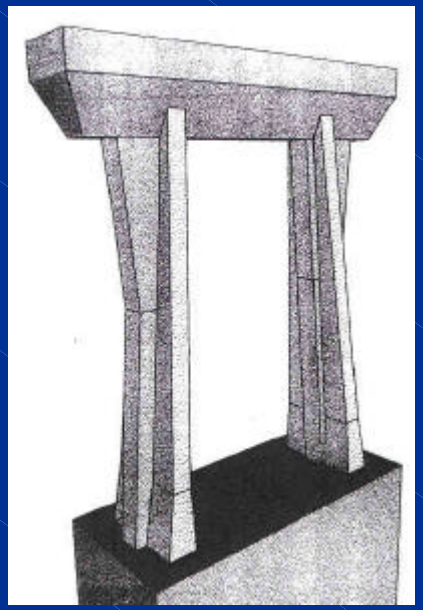

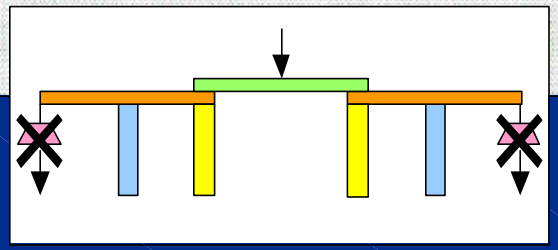

US Army Corps
of Engineers

Retrofit vs Existing

Photo Simulations

Retrofit Modifications -- Towers YB2 to YB4

Retrofit Modifications -- Towers E6 to E8, E10 to E22

US Army Corps
of Engineers

Replacement - Photo Simulation

Replacement Alternative N-6 as viewed from Yerba Buena Island

US Army Corps
of Engineers

Replacement

Photo simulation - from Oakland

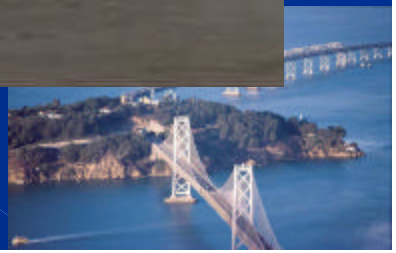

US Army Corps of Engineers

Replacement - Main Span

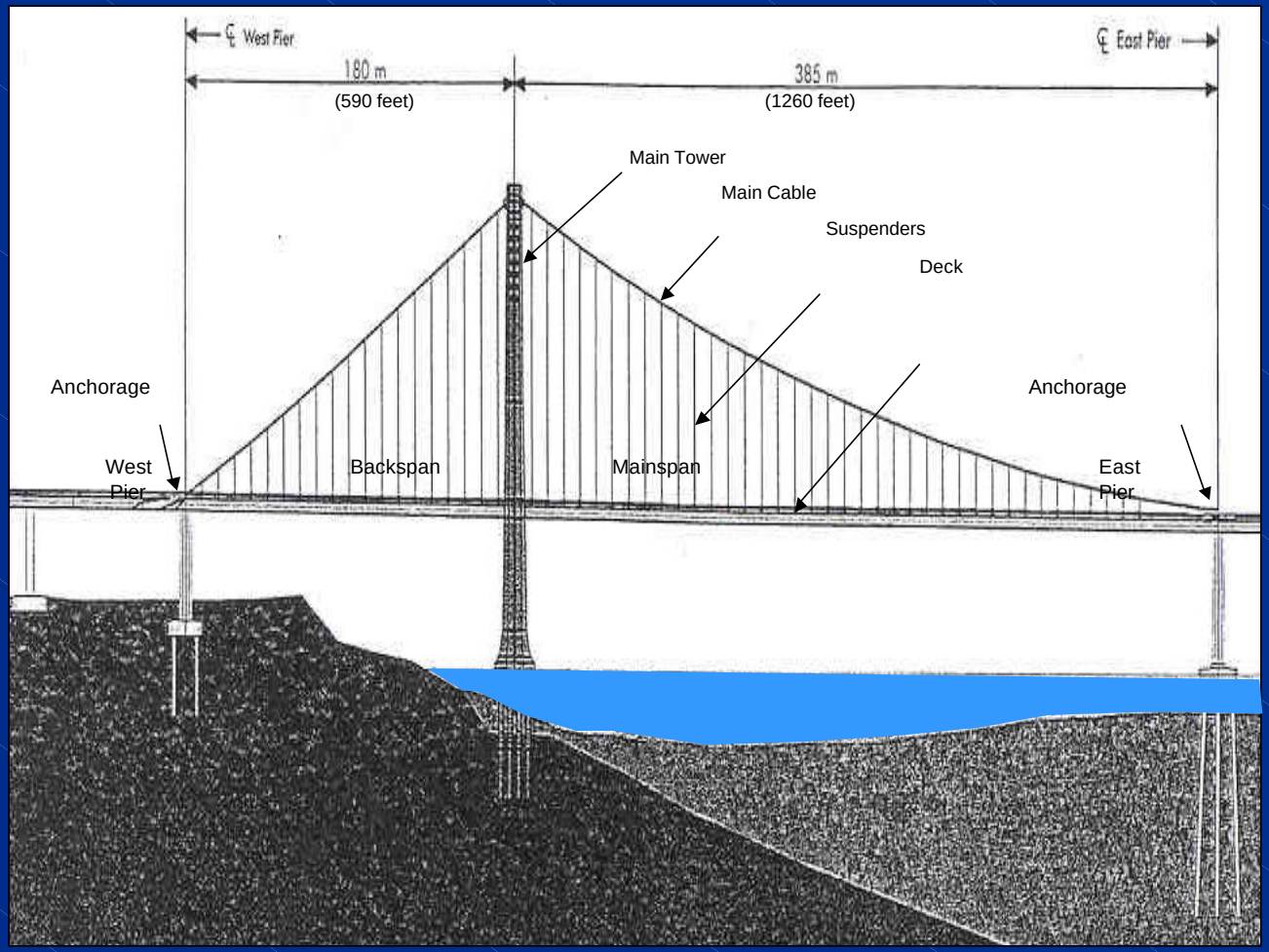

Self-Anchored Suspension Asymmetric Bridge

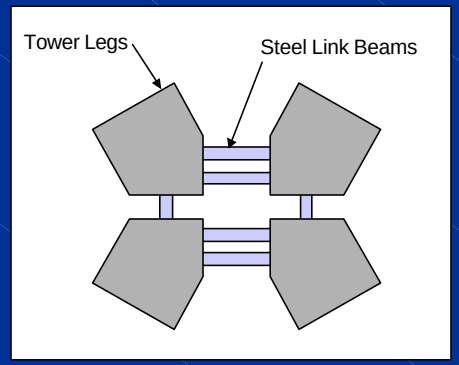

Typical Cross Section – Main Tower

US Army Corps
of Engineers

Replacement - Skyway

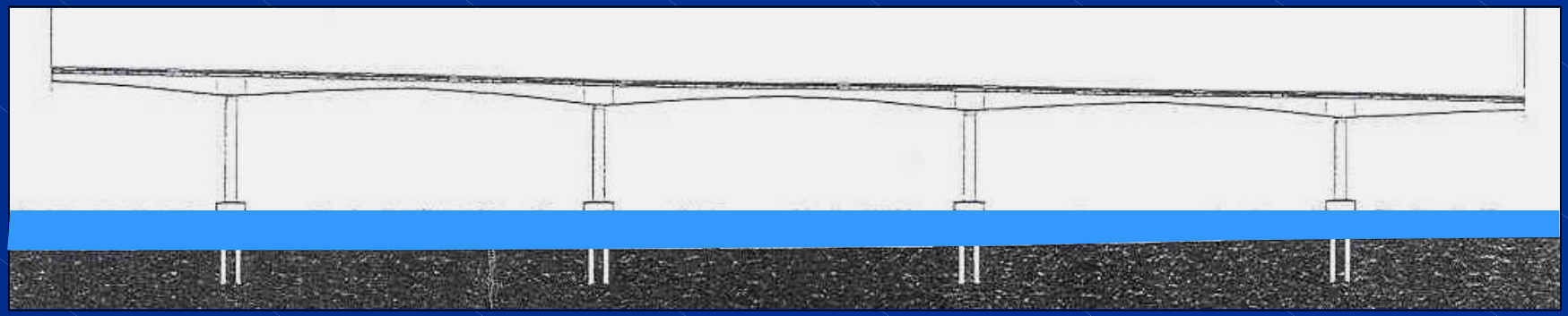

Typical frame for haunched concrete girders on Skyway Structure

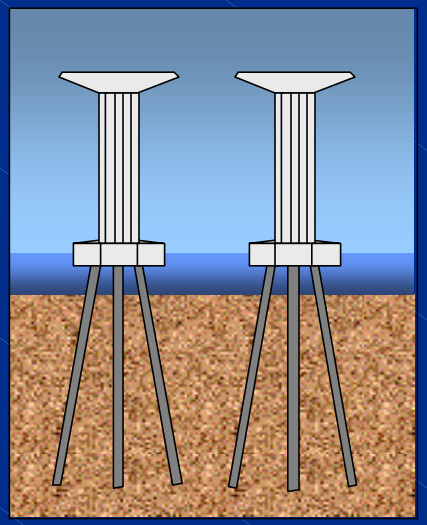

Section of Skyway

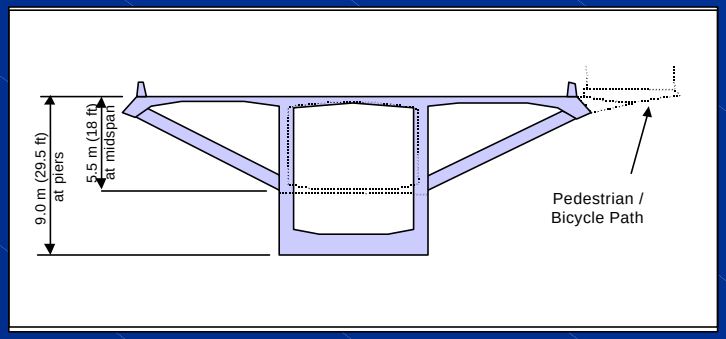

Cross-section of haunched concrete box

US Army Corps of Engineers

Ground Motion

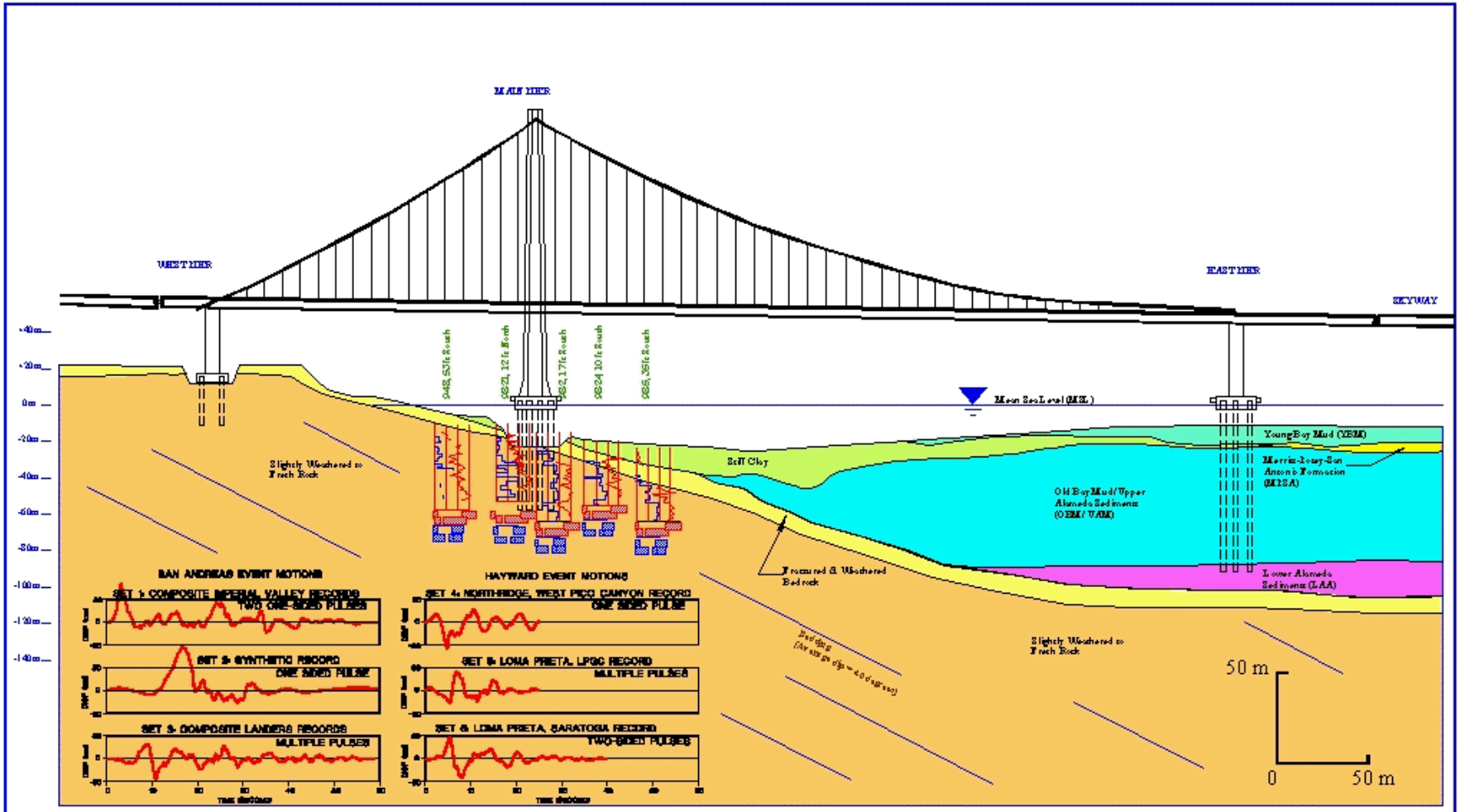

Earth Mechanics, Inc.
Geotechnical and Earthquake Engineering

SFOBB EAST SPAN SEISMIC SAFETY PROJECT

Project No. 98-145 | Date: 6/11/99

GEOLOGY AT SELF-ANCHORED SUSPENSION BRIDGE AND SIX SETS OF GROUND MOTIONS

FIG 4

US Army Corps of Engineers

Ground Motion Design Criteria

- 1500 yr return period motions
- 6 sets of time-histories
  - special attention to full range of rupture scenarios leading to velocity pulses (directivity effects; e.g., fling)
- Spectrum compatible at the two orthogonal direction AND over 360 degree rotations
  - account for wave passage effect
  - coherency matching to observed strong motion arrays
  - attenuation of shaking amplitude with distance
  - account for cross-correlation of orthogonal components

US Army Corps
of Engineers

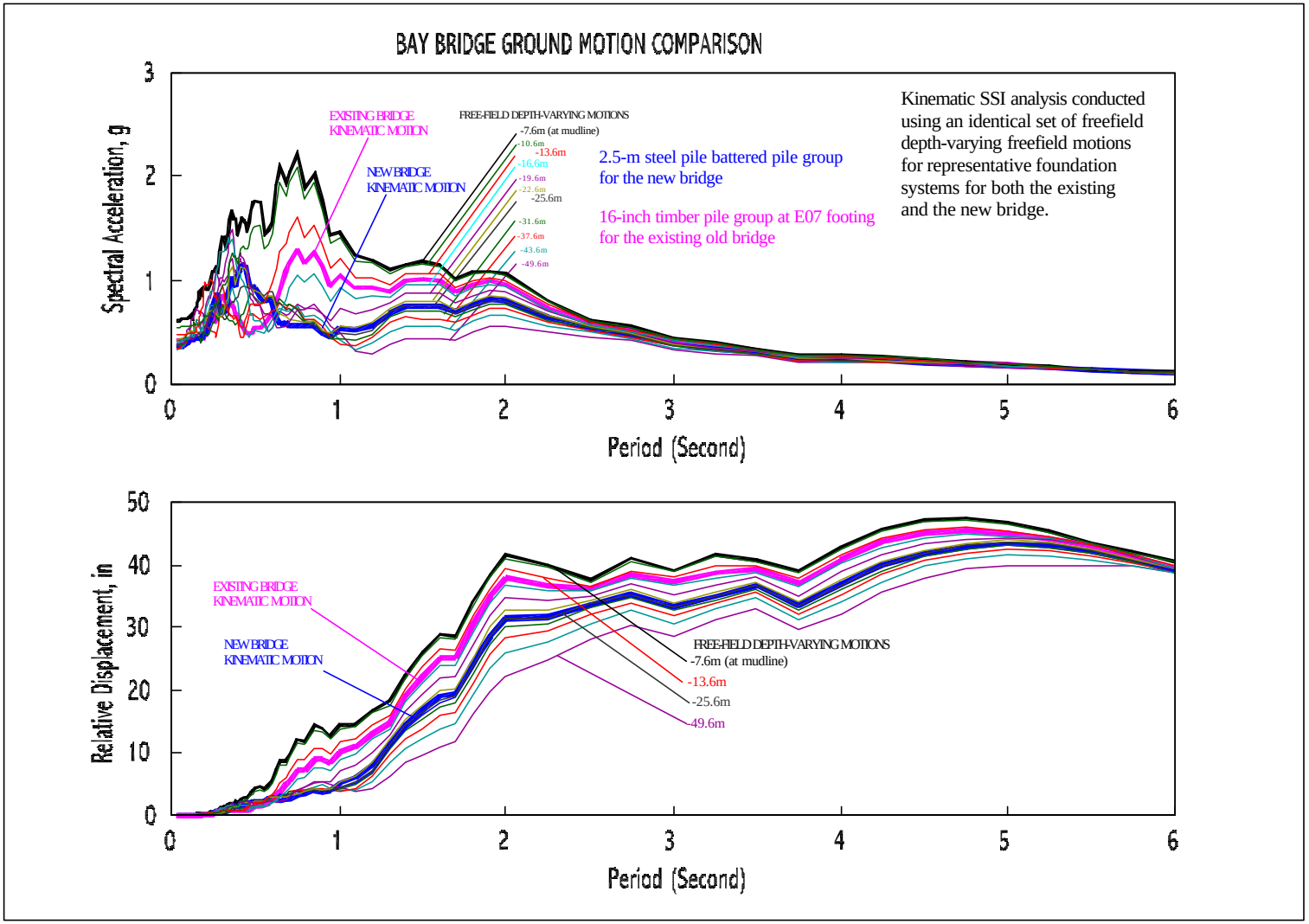

US Army Corps of Engineers

Seismic Loading

SEE

- Response spectrum
  - Fault parallel, fault normal and vertical spectra
  - 30% combination rule
- Time history
  - 6 earthquakes (3 on San Andreas & 3 on Hayward)
  - 2 horizontal and 1 vertical motion per earthquake
  - Near fault effects included

US Army Corps of Engineers

Geologic Section @ Main Pier

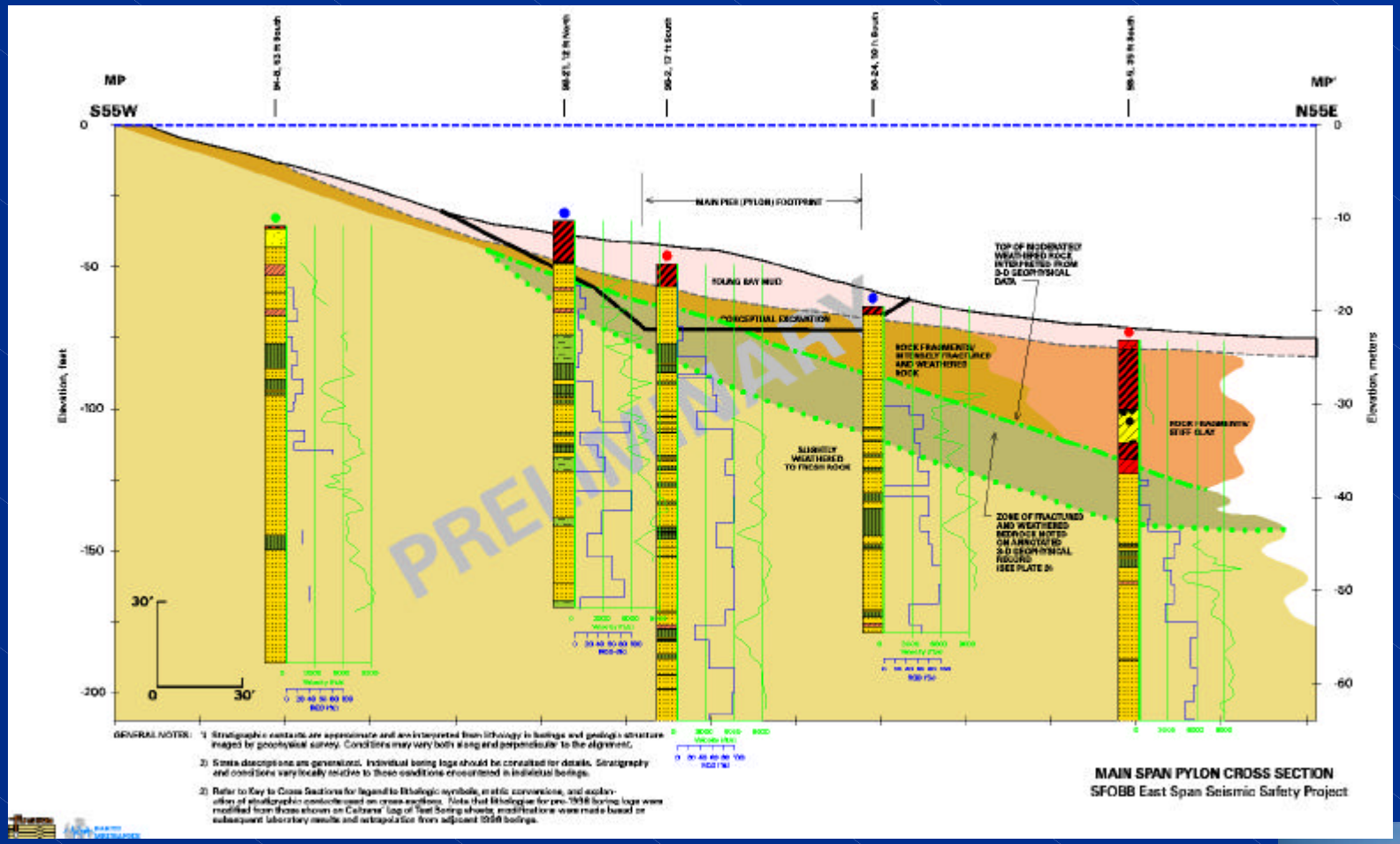

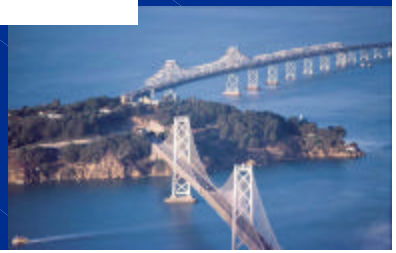

US Army Corps of Engineers

Stratigraphic Section - N6 Alignment Centerline

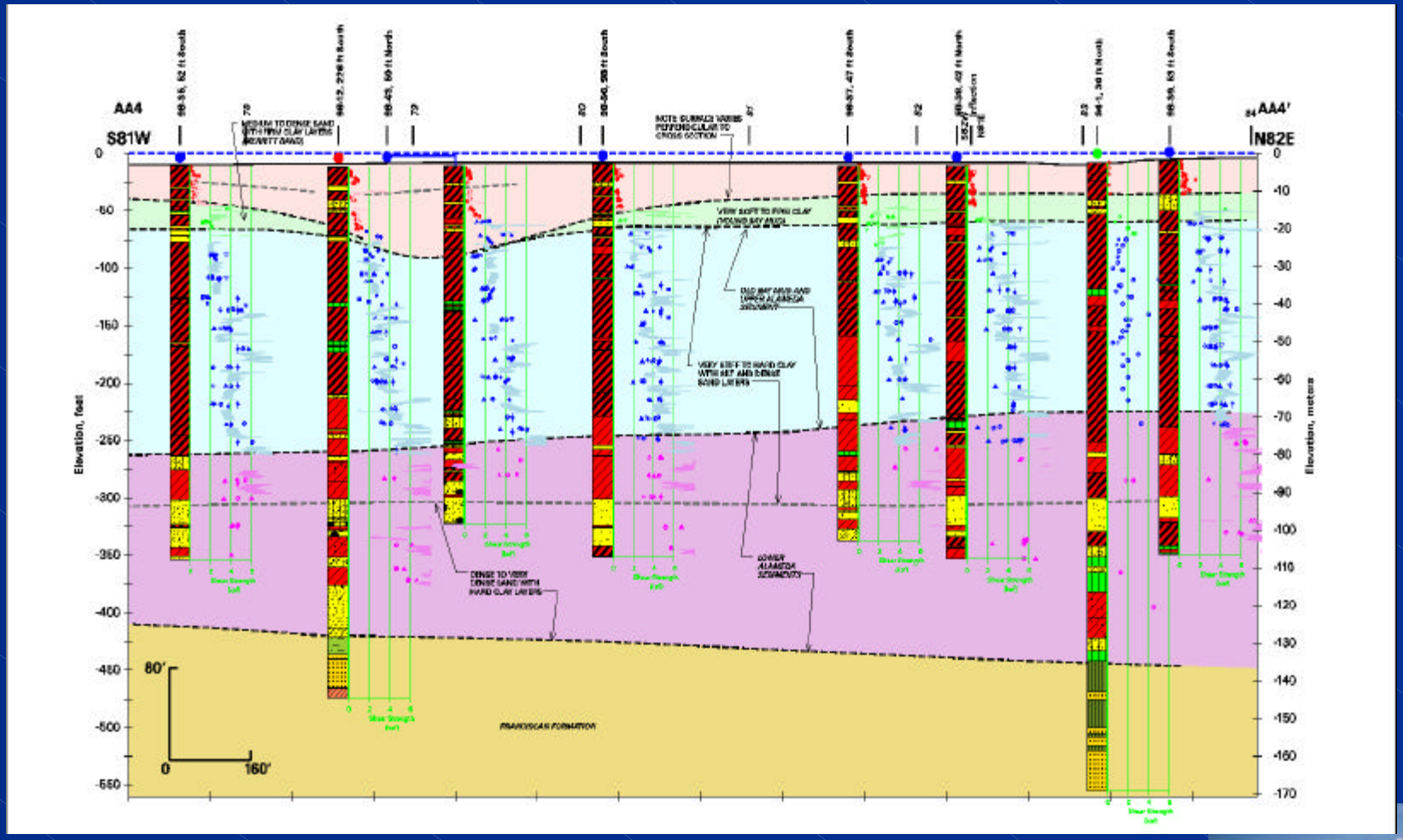

US Army Corps of Engineers

Marine Exploration Program

- Phase 1 - 14 Borings
- Phase 2 - 30 Borings
- 100 to 140 Meter Penetration
- Soil Sampling - 3,400 Pushed & Driven Samples
- Rock Coring - 530 meters cored
- In Situ Testing
  - Cone Penetration Tests
  - In Situ Vane Shear Tests
  - Pressuremeter Tests
- Onboard Laboratory Testing
- Downhole Geophysical Logging

US Army Corps of Engineers

Land Exploration Program

Yerba Buena Island

- **Field Investigation Program**
  - **40 borings with Onsite and Lab Testing**
  - **One inclined Boring - 90 m deep at West Pier Location**
  - **With P-S Logging and Video Logging (Selected Borings)**
  - **10 Cone Penetration Tests (CPTs)**
- **Project Participant and Media Tours**
- **Analyzed Rock Test Data and Developed Geologic Profiles**
- **Analyzing/Evaluating Potential Zones Near West Pier**
- **Foundation Engineering and Slope Stability Input**
- **Draft Site Characterization Report (in Process)**
- **Rock Slope Stability Report For Main Span Pylon and West Pier (Submitted)**
- **Further Developing Pile Load Testing Program**

US Army Corps of Engineers

Land Exploration Program

Oakland Shore Approach

- 25 Land-Based Borings
  - 7.5 - 71 Meter Penetration
  - In-situ Remote Vane Shear Tests
- Field Laboratory Tests
  - Shear Strength, Unit Weight, Moisture Content
- 25 Land-Based CPT Soundings
  - 12 - 50 meter penetration
  - 5 CPTs with shear wave velocity measurements
- 53 Tethered Seascout CPT Soundings on Tidal Flat
- 2 Trench & 2 Pit Excavations

US Army Corps
of Engineers

Self-Anchored Suspension Segment

US Army Corps of Engineers

Bridge Elevation

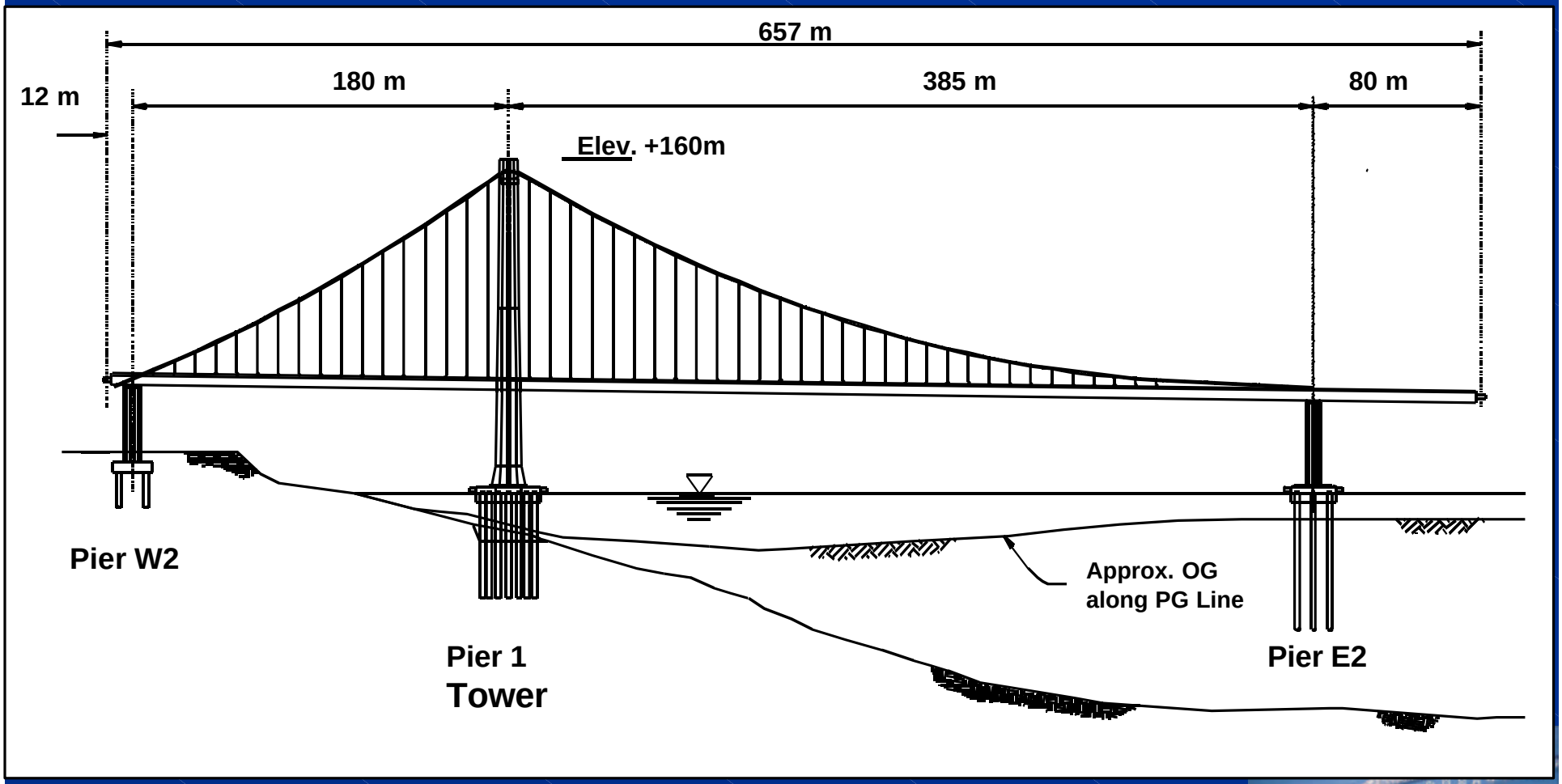

US Army Corps of Engineers

Asymmetric
Self-Anchored Suspension Bridge

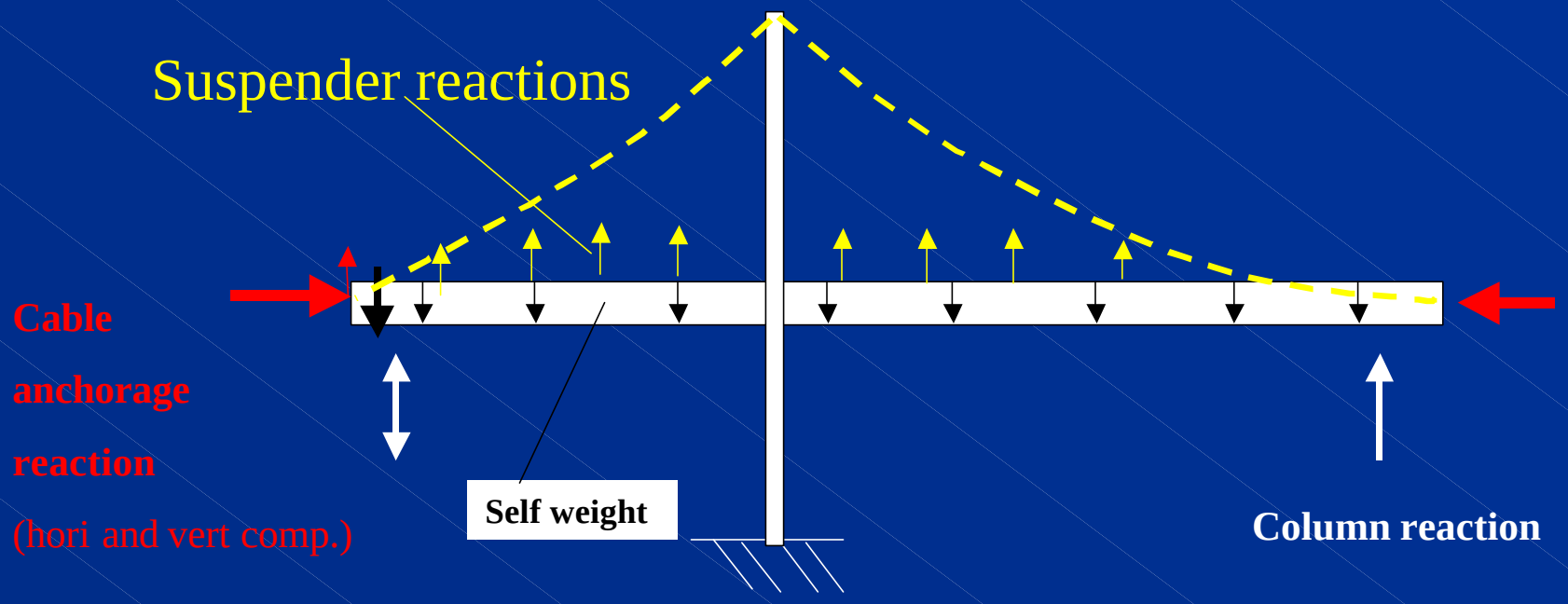

US Army Corps
of Engineers

Single Tower

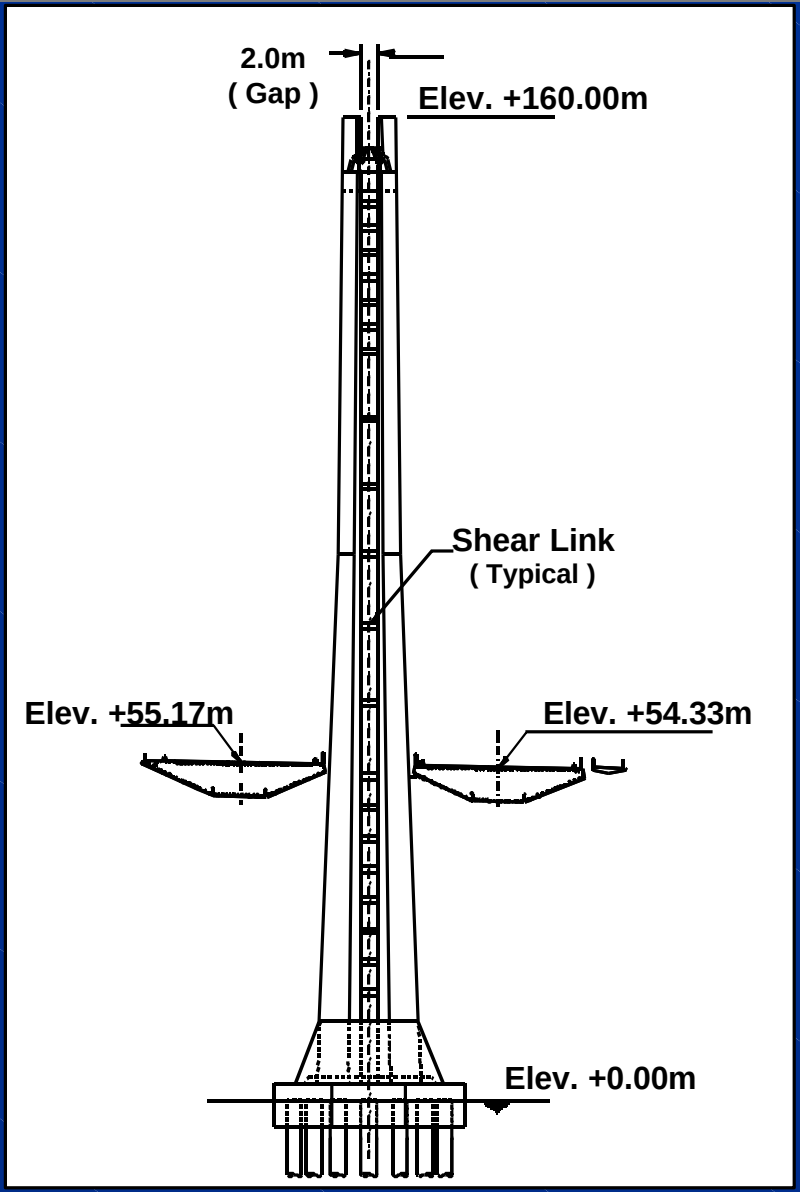

US Army Corps
of Engineers

Bridge Plan

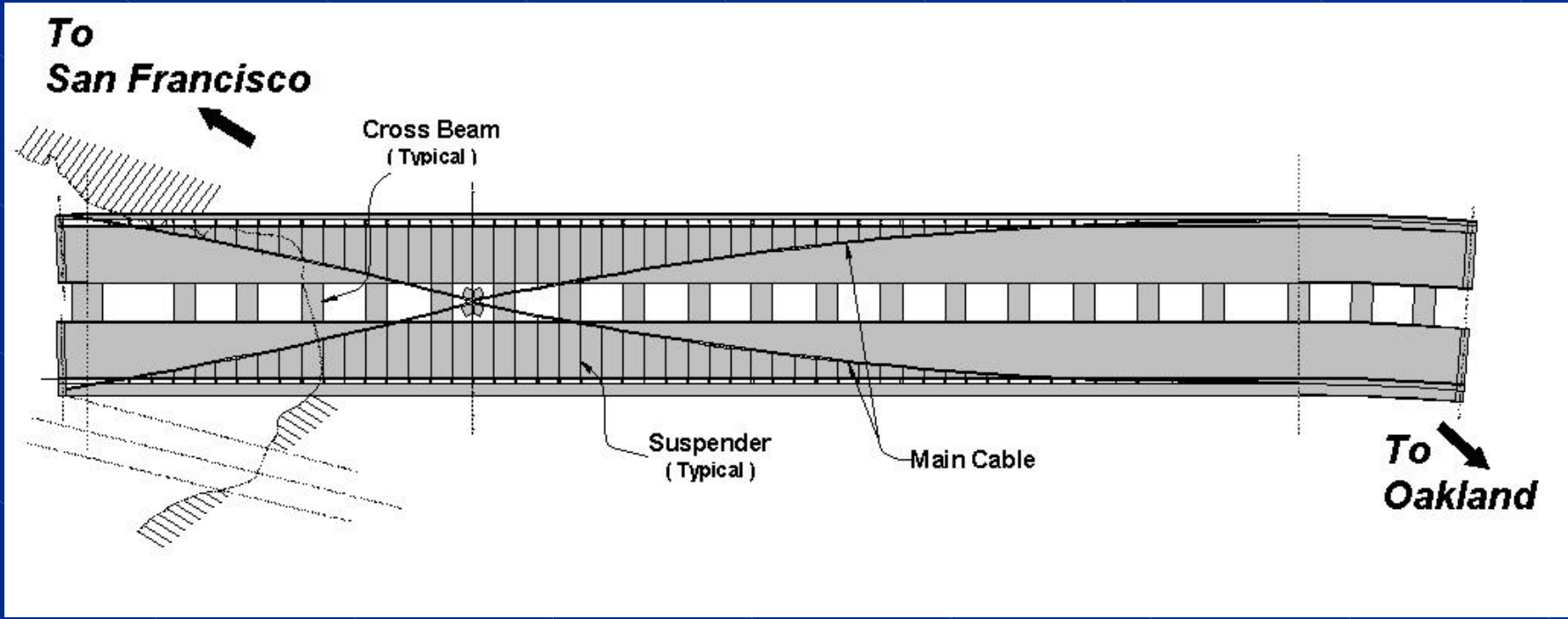

US Army Corps of Engineers

Tower Section and Shear Links

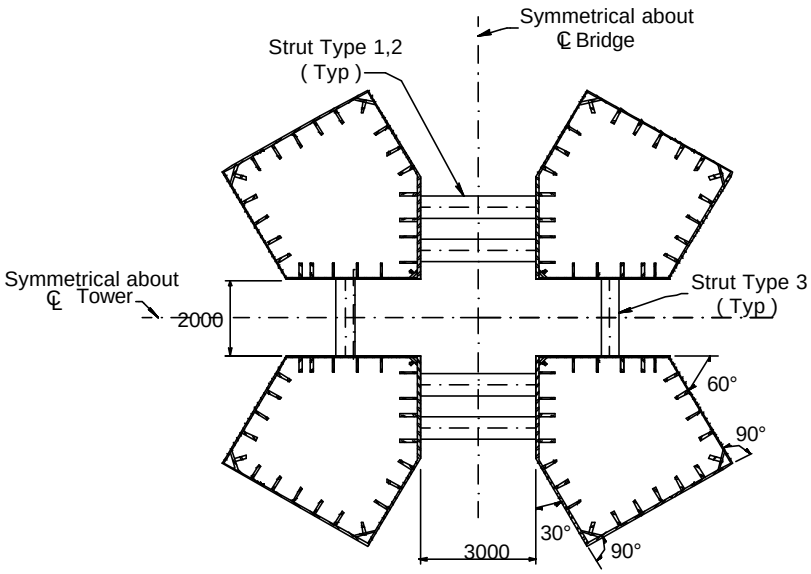

TYPICAL TOWER CROSS SECTION

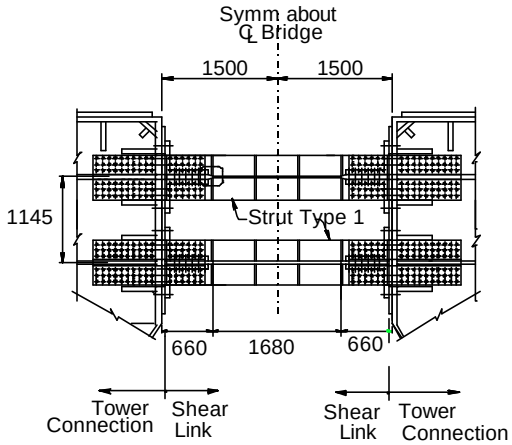

PLAN VIEW

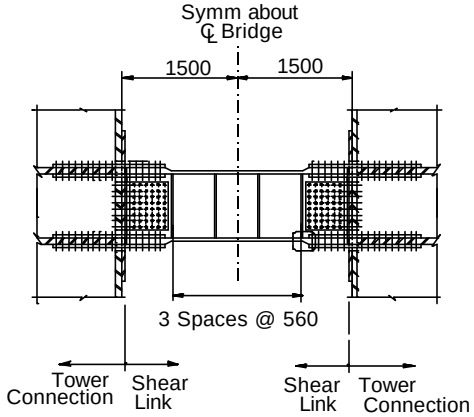

ELEVATION

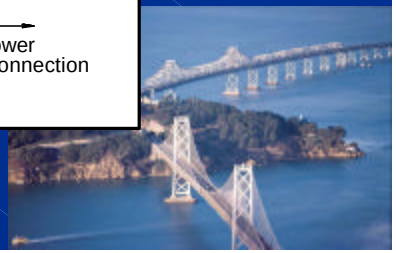

US Army Corps of Engineers

Tower Foundation

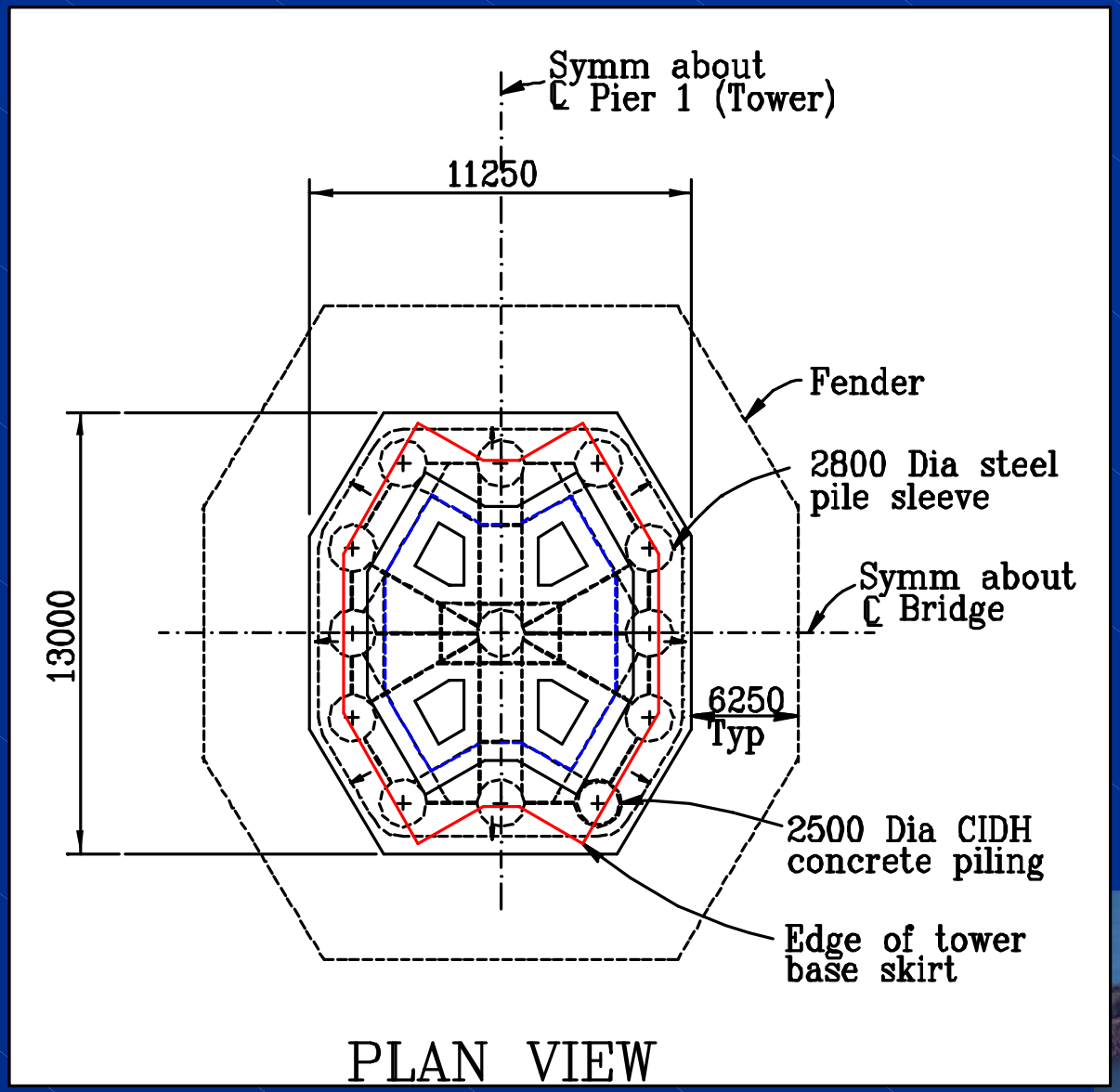

US Army Corps of Engineers

Tower Saddle

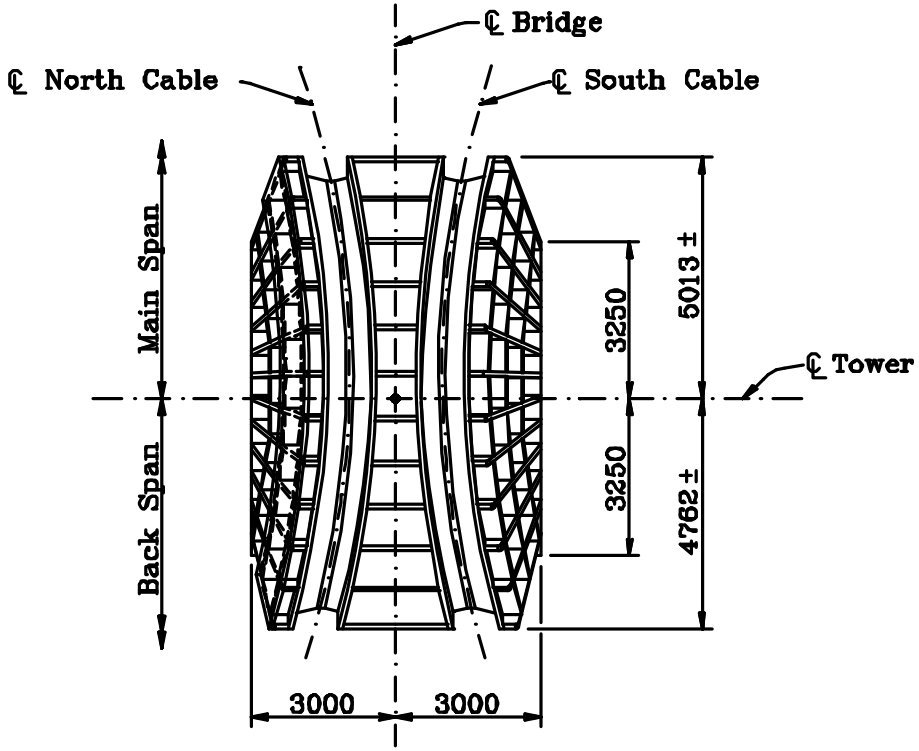

PLAN VIEW

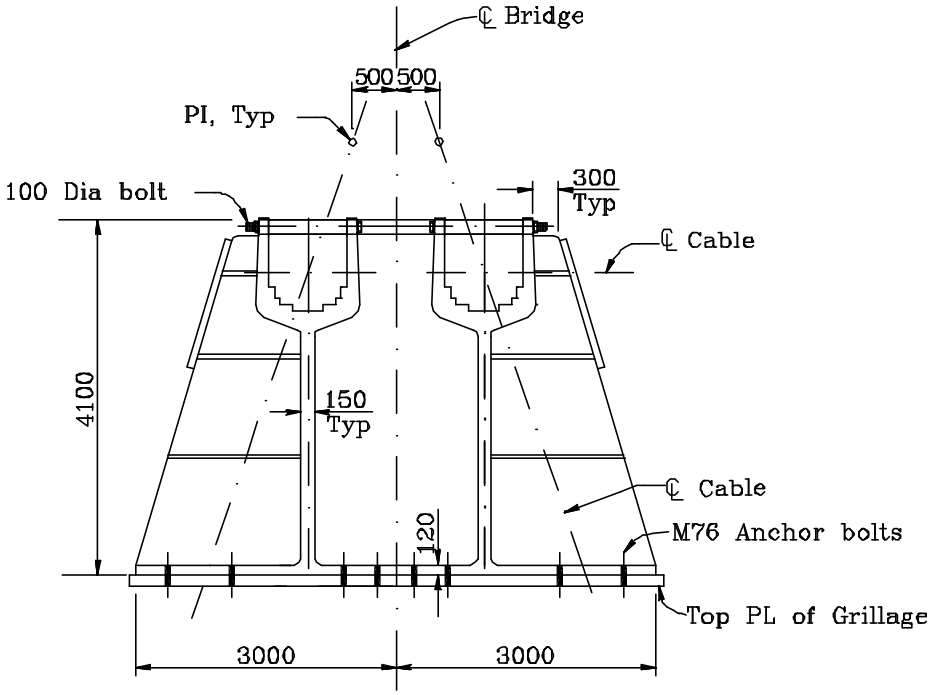

CROSS SECTION

US Army Corps
of Engineers

Skyway Segment

US Army Corps
of Engineers

Skyway

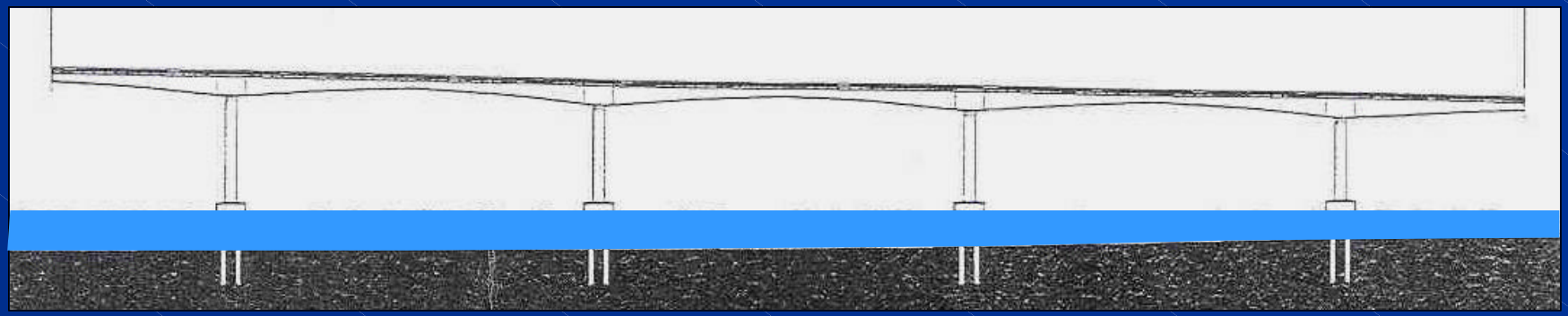

Typical frame for haunched concrete girders on Skyway Structure

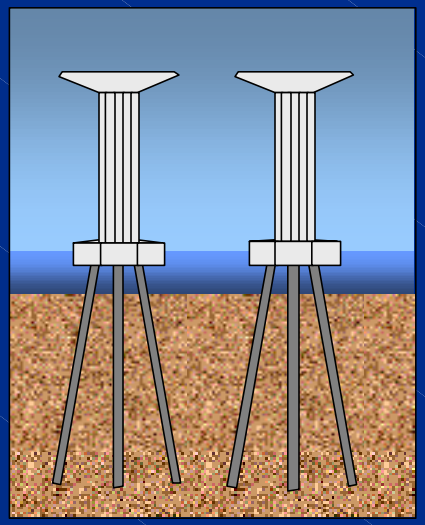

Section of Skyway

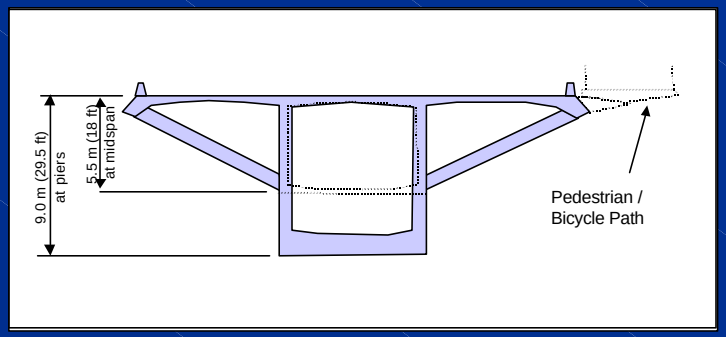

Cross-section of haunched concrete box

US Army Corps
of Engineers

Pile Cap: Piers E3 Through E6

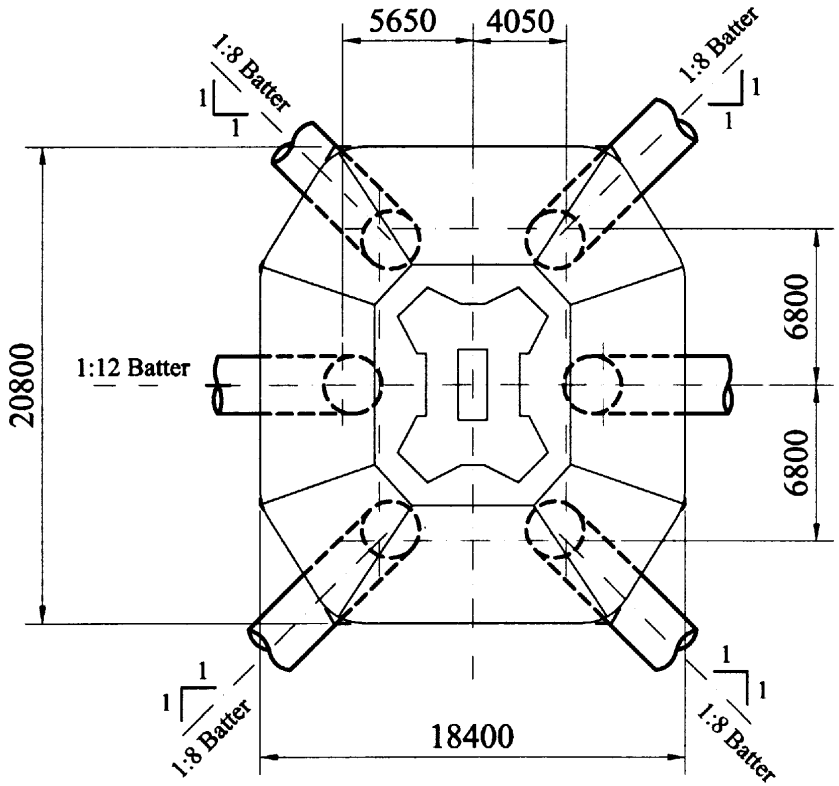

PLAN

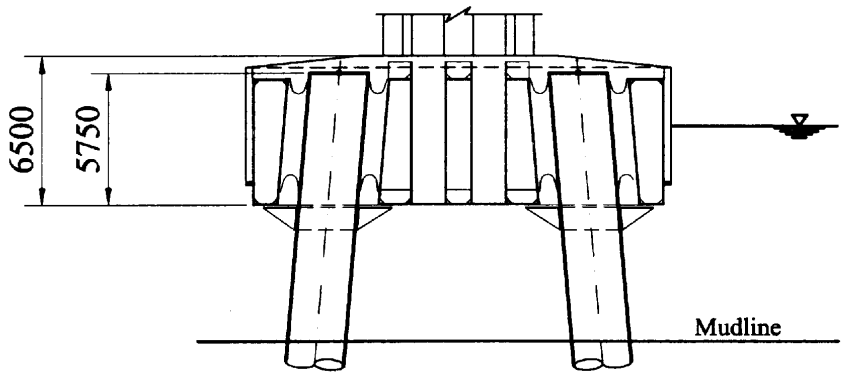

SECTION

US Army Corps of Engineers

Typical Cross Section Piers E15 and E16

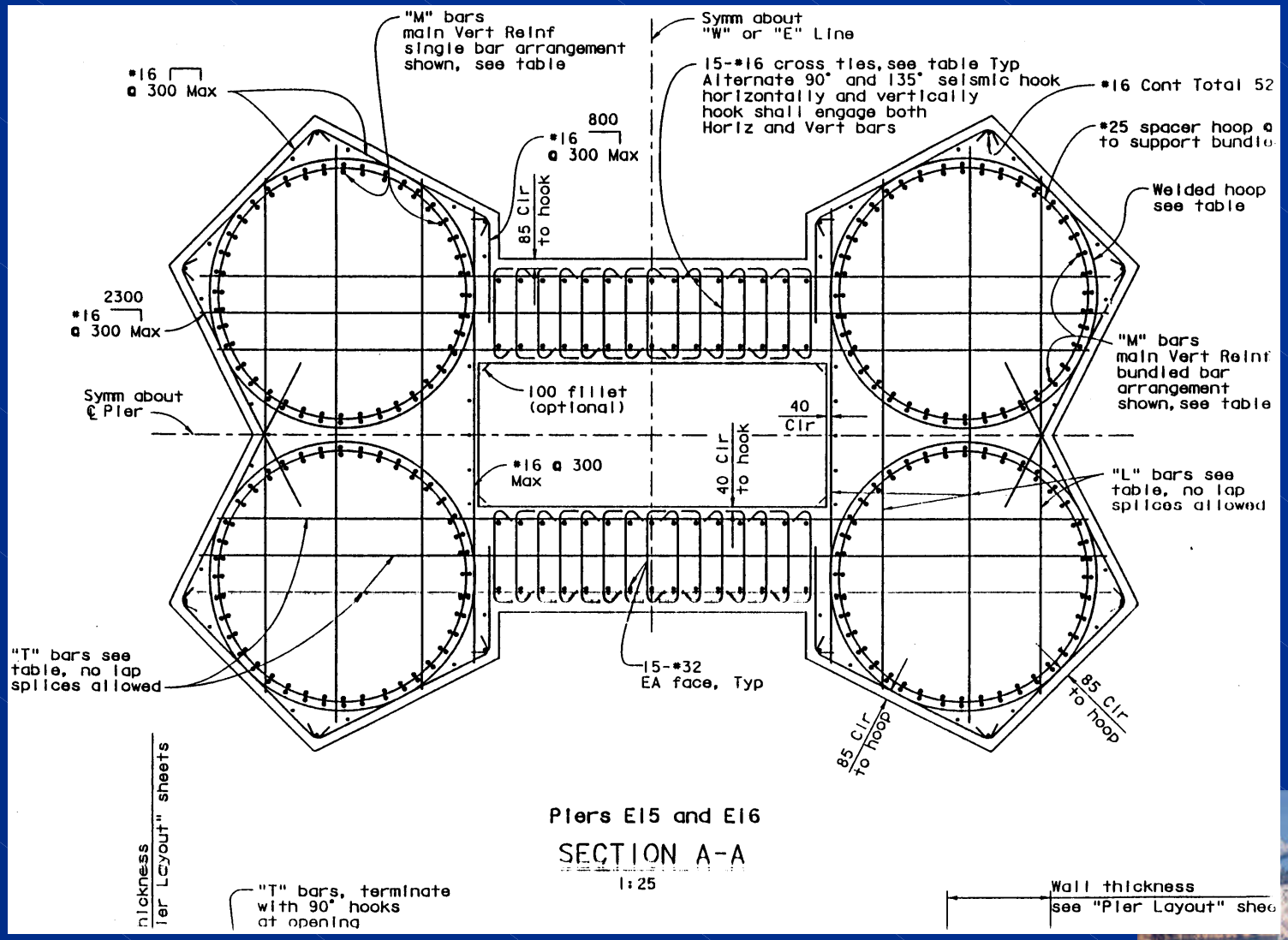

US Army Corps
of Engineers

ADINA Global Model of Skyway: Eastbound

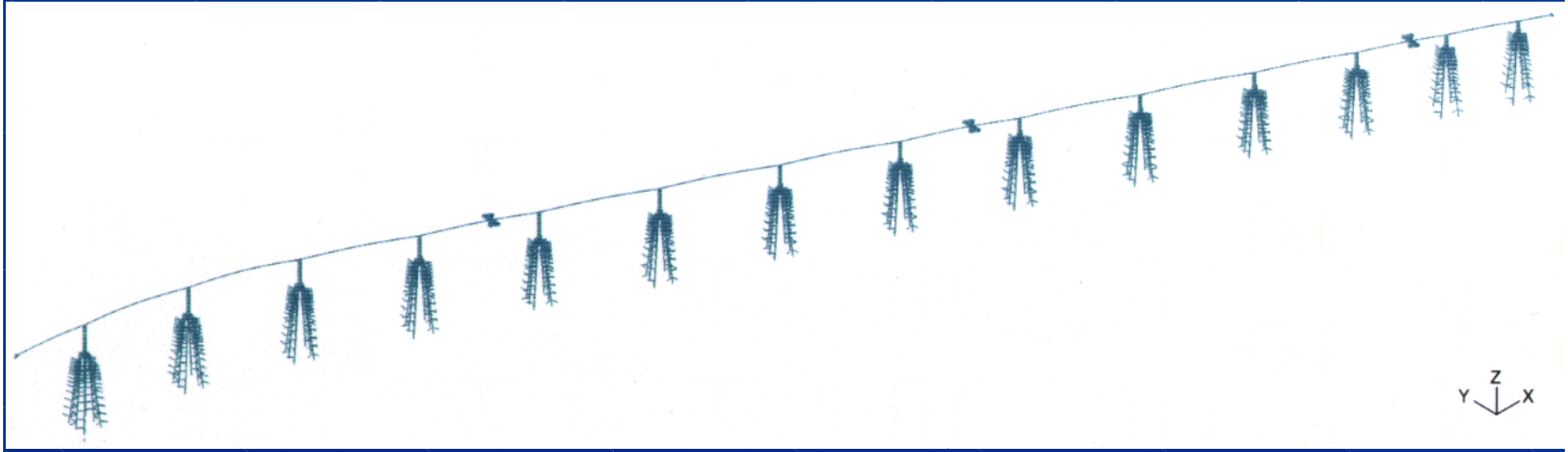

US Army Corps
of Engineers

ADINA Model of Typical Pier

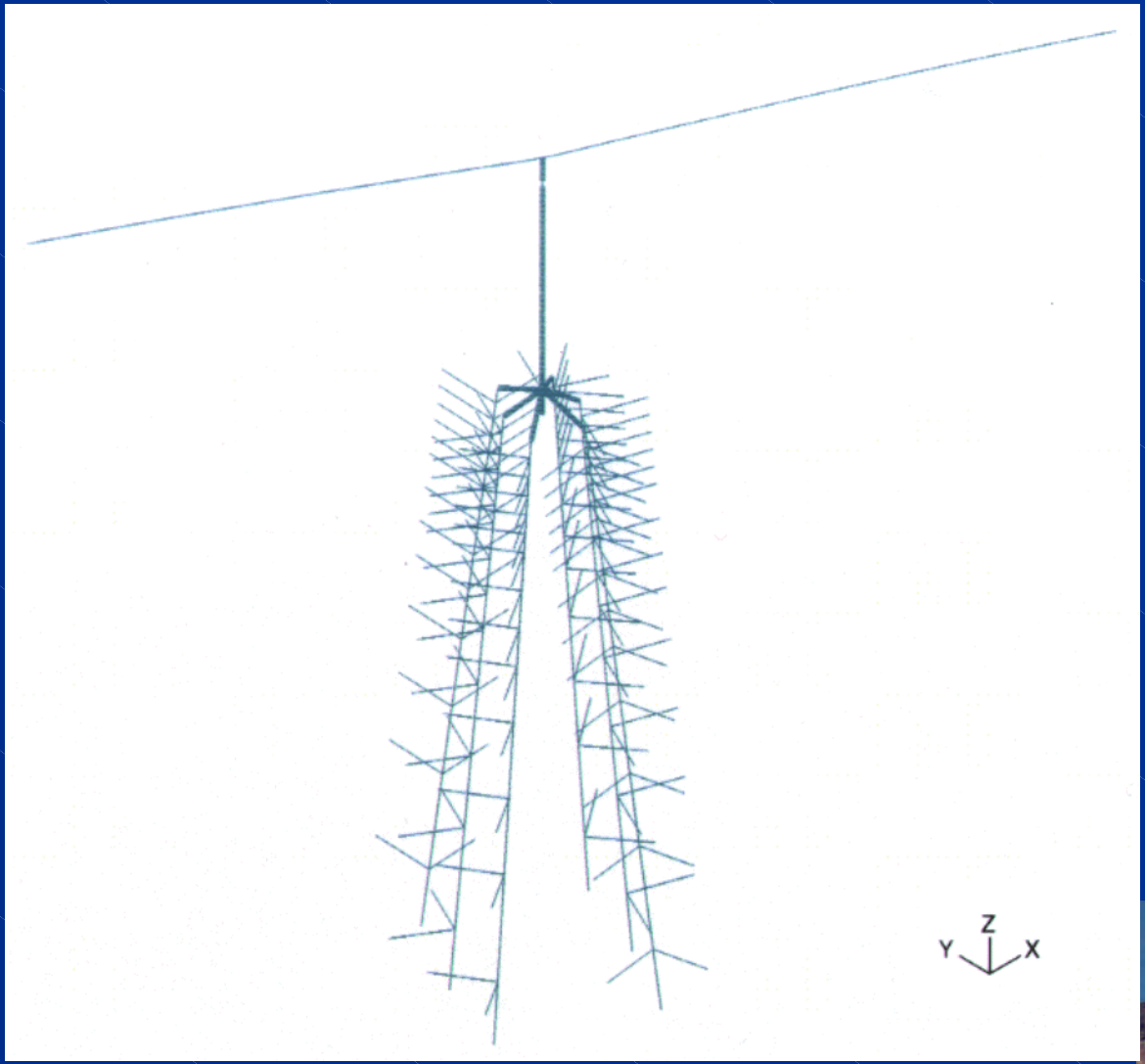

US Army Corps
of Engineers

Plastic Hinging: Longitudinal Direction

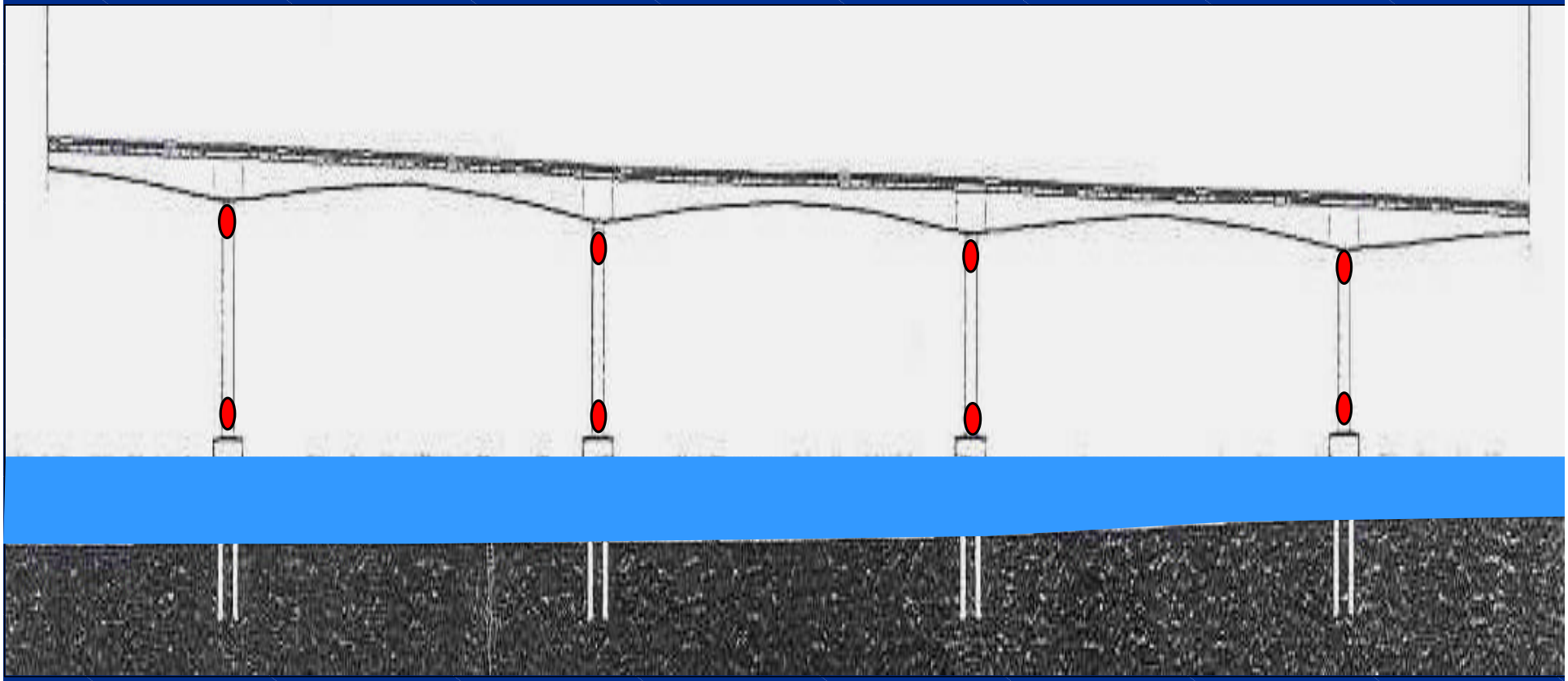

Typical frame for haunched concrete girders on Skyway Structure

US Army Corps
of Engineers

Plastic Hinging: Transverse Direction

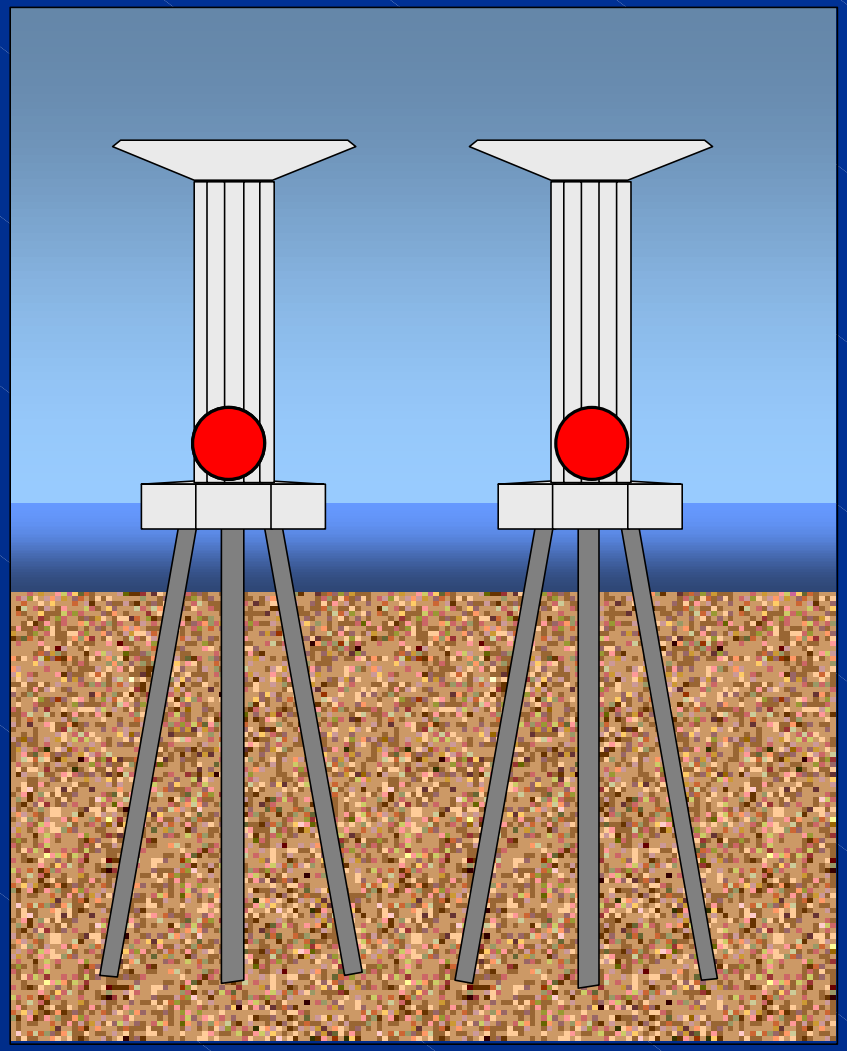

Section of Skyway

US Army Corps of Engineers

SEE Strain Demands Pier 6: Diagonal

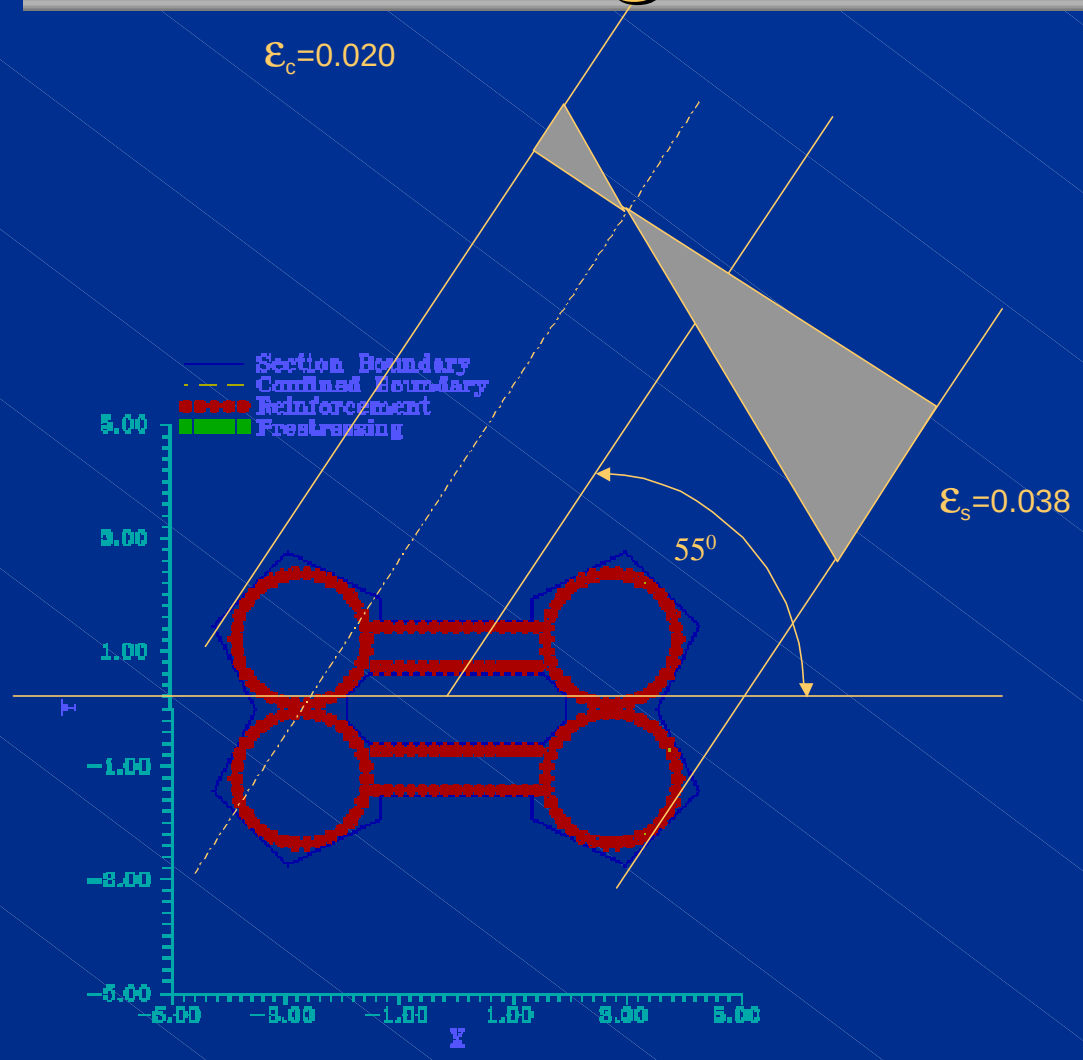

row keys Pan, +Zoom in, -Zoom out, 1-9 Zoom/Pan increment, Esc Exits

US Army Corps
of Engineers

Mid-span Hinge

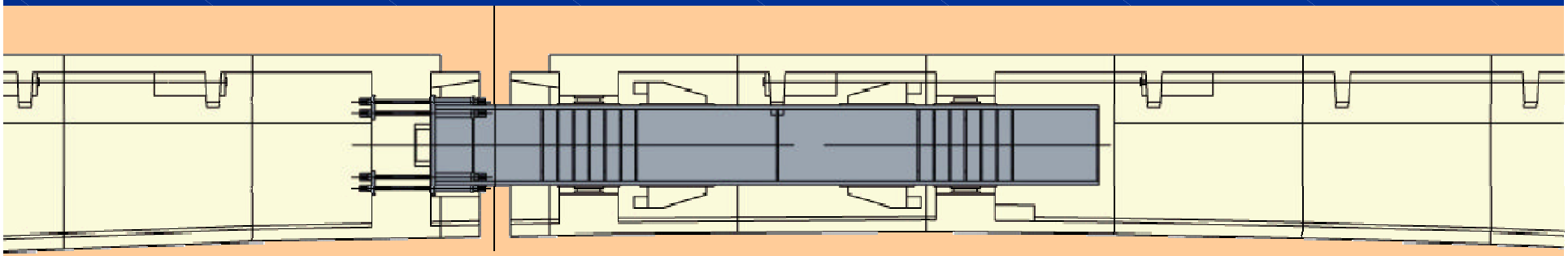

Section

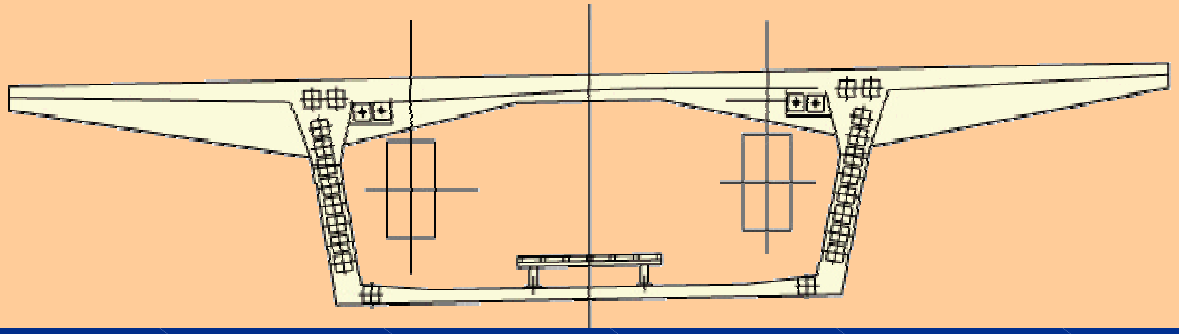

US Army Corps of Engineers

Construction Similarities

Barge Based Work

Most in-water construction will take place from barges. Barges will be used for:

- **Material delivery**
- **Dredging**
- **Drilling**
- **Pile driving**
- **Lifting**
- **Pile extraction**
- **Constructing cofferdams**
- **Dismantling**

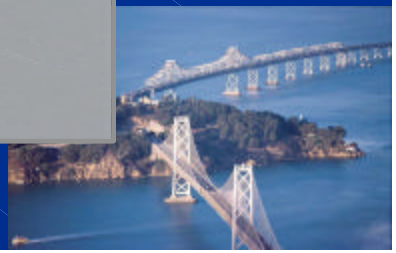

Construction barges on the Vilano Bridge

US Army Corps of Engineers

Construction Similarities

Substructure Construction

Pile installation at San Mateo-Hayward Bridge

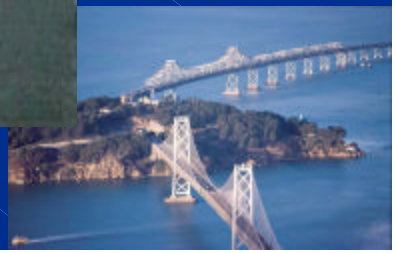

US Army Corps of Engineers

Conclusions

* Caltrans' proposed retrofit strategy was not reasonable due to concerns regarding the isolation strategy, incompleteness of design, and definition of performance criteria.

* Based on safety of the public to the seismic vulnerability, it was the COE Team's opinion that, at this point in time, a replacement alternative is preferable to a retrofit alternative.

* Seismic safety of the replacement bridge is being addressed as Caltrans' design team works towards meeting the seismic performance criteria.

* The replacement bridge does not meet lifeline criteria as defined in the Scope of Work and has not been evaluated or designed for MCE.